2401461-1 ✔ ACTIVE

MCON | MCON Interconnection System

TE Internal #: 2401461-1

12 V / 24 V / 48 V, 30 Position, Automotive Housing for Male Terminals, Wire-to-Wire, MCON Interconnection System

View on TE.com >

Automotive Parts > Automotive Connectors > Automotive Housings







Nominal Voltage Architecture: **12 V, 24 V, 48 V**

Connector & Housing Type: **Housing for Male Terminals**

Number of Positions: **30**

Sealable: **Yes**

Operating Temperature Range: **-40 – 130 °C [-40 – 266 °F]**

Features

Product Type Features

Mixed & Hybrid Connector	Yes
Connector Shape	Rectangular
Connector & Housing Type	Housing for Male Terminals
Sealable	Yes
Primary Locking Feature	Integrated in Housing
Connector System	Wire-to-Wire
Connector & Contact Terminates To	Wire & Cable

Configuration Features

Number of Positions	30
Number of Rows	3

Electrical Characteristics

Nominal Voltage Architecture	12 V, 24 V, 48 V

Body Features

Cable Exit Angle	180 °

Primary Product Color	Black
Connector & Keying Code	A

Contact Features

Contact Size	1.2mm, 2.8mm, 5.8mm
Contact Type	Tab
Mating Tab Width	1.2 mm, 2.8 mm, 5.8 mm[.047 in][.11 in][.23 in]
Contact Current Rating (Max)	12 A, 30 A, 40 A

Mechanical Attachment

Strain Relief	Without
Terminal Position Assurance	No
Mating Alignment Type	Keyed
Mating Alignment	With
Connector Mounting Type	Cable Mount (Free-Hanging)

Housing Features

Housing Material	PBT GF30
Centerline (Pitch)	3 mm, 6 mm[.118 in][.236 in]

Dimensions

Row-to-Row Spacing	4.2 mm[.16 in]
Product Width	63.2 mm[2.48 in]
Product Length	84.9 mm[3.34 in]
Connector Height	35.5 mm[1.4 in]

Usage Conditions

Operating Temperature Range	-40 – 130 °C[-40 – 266 °F]
Operating Temperature (Max)	130 °C[266 °F]

Operation/Application

Circuit Application	Power

Packaging Features

Packaging Quantity	20
Packaging Method	Package

Other

Serviceable	No

Connector Position Assurance Capable	Yes

Product Compliance

For compliance documentation, visit the product page on TE.com>

EU RoHS Directive 2011/65/EU	Compliant
EU ELV Directive 2000/53/EC	Compliant
China RoHS 2 Directive MIIT Order No 32, 2016	有害物质含量符合标准要求 No Restricted Substance(s) Above Threshold
EU REACH Regulation (EC) No. 1907/2006	Current ECHA Candidate List: JUNE 2025 (250) Candidate List Declared Against: JUNE 2025 (250) SVHC > Threshold: Dodecamethylcyclohexasiloxane (D6) (.5% in M-14165-1) Octamethylcyclotetrasiloxane (D4) (.5% in M-14165-1) Decamethylcyclopentasiloxane (D5) (.5% in M-14165-1) **Article Safe Usage Statements:** Wash thoroughly after handling. Recycle if possible and dispose of the article by following all applicable governmental regulations relevant to your geographic location.
Halogen Content	Low Halogen - Br, Cl, F < 900 ppm per homogenous material. Also BFR/CFR/PVC Free
Solder Process Capability	Not reviewed for solder process capability

Product Compliance Disclaimer

This information is provided based on reasonable inquiry of our suppliers and represents our current actual knowledge based on the information they provided. This information is subject to change. The part numbers that TE has identified as EU RoHS compliant have a maximum concentration of 0.1% by weight in homogenous materials for lead, hexavalent chromium, mercury, PBB, PBDE, DBP, BBP, DEHP, DIBP, and 0.01% for cadmium, or qualify for an exemption to these limits as defined in the Annexes of Directive 2011/65/EU (RoHS2). Finished electrical and electronic equipment products will be CE marked as required by Directive 2011/65/EU. Components may not be CE marked. Additionally, the part numbers that TE has identified as EU ELV compliant have a maximum concentration of 0.1% by weight in homogenous materials for lead, hexavalent chromium, and mercury, and 0.01% for cadmium, or qualify for an exemption to these limits as defined in the Annexes of Directive 2000/53/EC (ELV). Regarding the REACH Regulation, the information TE provides on SVHC in articles for this part number is based on the latest European Chemicals Agency (ECHA) 'Guidance on requirements for substances in articles' posted at this URL: https://echa.europa.eu/guidance-documents/guidance-on-reach

Compatible Parts

TE Part # 2272725-1
30P SEALED HYBRID, CAP CPA

Also in the Series | MCON Interconnection System



Automotive Connector Caps & Covers (43)

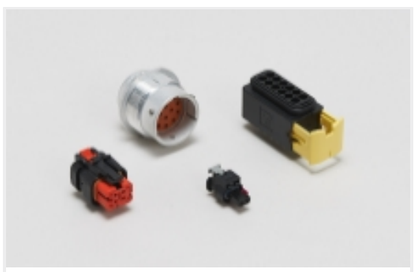

Automotive Housings(117)



Automotive Signal & Power Headers(4)

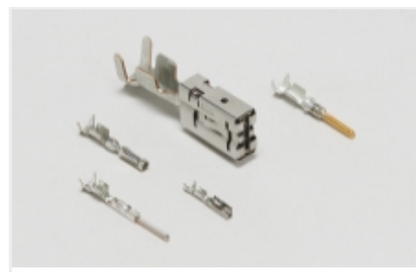

Automotive Terminals(25)

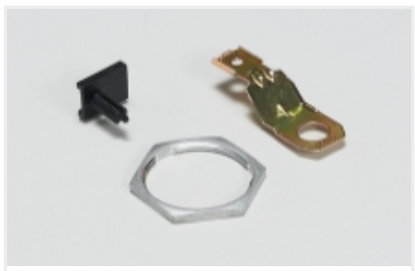

Other Automotive Connector Accessories(1)

Customers Also Bought



TE Part #DT04-2P
REC, 2P, GRY, N



TE Part #DT06-2S
PLG, 2P, GRY, N



TE Part #CAT-D48-ST273
DEUTSCH Connector Solid Contacts



TE Part #CAT-D487-W416
Wedgelocks: DEUTSCH DT



TE Part #114017-ZZ
SEALING PLUG, SIZE 12/16, WHT

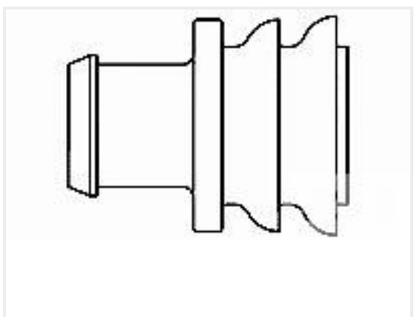

TE Part #281934-2
SINGLE WIRE SEAL



TE Part #CAT-AM71-CH8172
AMP SUPERSEAL 1.5MM, CONNECTOR HOUSING

Documents

Product Drawings

30POS,HYBRID,TAB HSG ASSY,SLD,COD A

English

CAD Files

3D PDF

3D

Customer View Model

ENG_CVM_CVM_2401461-1_A1.2d_dxf.zip

English

Customer View Model

ENG_CVM_CVM_2401461-1_A1.3d_stp.zip

English

Customer View Model

ENG_CVM_CVM_2401461-1_A1.3d_igs.zip

English

By downloading the CAD file I accept and agree to the Terms and Conditions of use.

Instruction Sheets

Instruction Sheet (U.S.)

English