SYMBOL DEFINITION		
A DIMENSION WITHOUT AN INSPECTION REPORT SYMBOL (▭) DOES NOT REQUIRE INSPECTION. IT MAY BE CONTROLLED ON THE INDIVIDUAL COMPONENT DRAWING.	TOTAL NO OF INSPECTIONS REQUIRED	17
	LAST NO. USED	6

MISSING SYMBOLS

NO MISSING SYMBOL NUMBER

DWG STATUS					ZONE	REVISION HISTORY	AUTH	DR	APVD 1	APVD 2
DATE	STG	REV	N/P	CHG						
12MR14	R	01	-	-		13837483 - WAS SEPARATE DRAWING; 33154294 - RELEASED	425865	CGD	JVM	RLG
06MY14	R	02	-	-		33154294 - Ø 12.15 WAS Ø 12.75	426466	JVR	JVM	RLG
15JL14	R	03	-	-		33154294 - Ø 12.75 WAS Ø 12.15	426922	AHG	AHG	YVH
23JL14	R	04	-	-		33154294 - UPDATED MAT'L CALLOUT	427106	AHG	AHG	YVH
28AP16	R	05	-	-		33154294 - UPDATED PART AVAILABILITY	432867	NRM	YVH	YVH

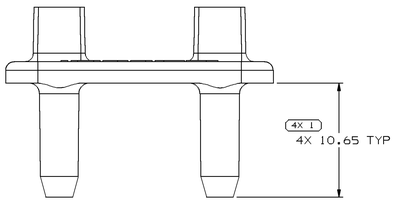

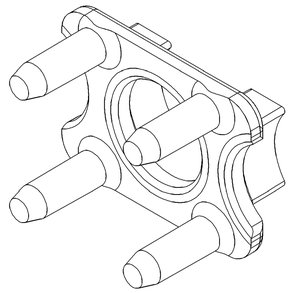

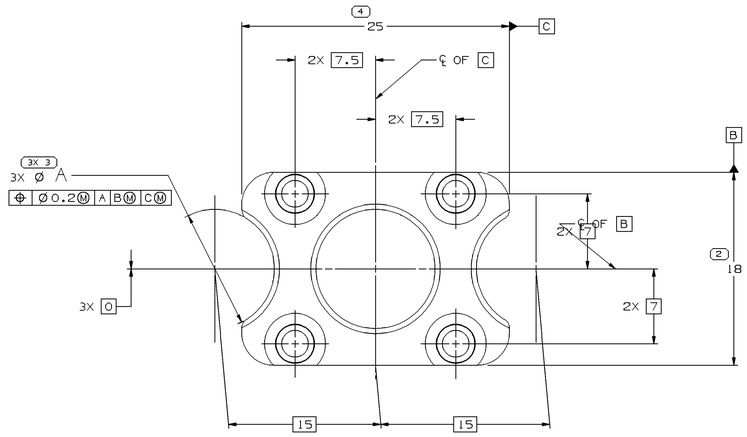

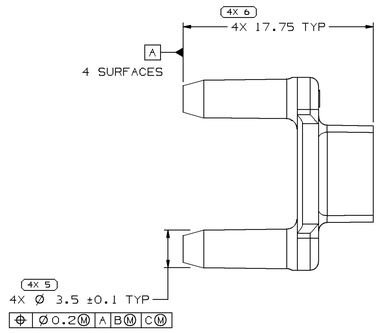

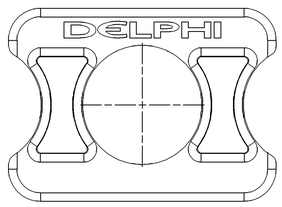

NOTES

1. UNLESS OTHERWISE SPECIFIED AND/OR INDICATED:

   DIMENSIONS ARE TO FACE OF VIEW SHOWN AND AUTOMATICALLY ROUNDED BY COMPUTER FOR INSPECTION (SEE MATH MODEL FOR PRECISE DIMENSIONS). FOR ALL OTHER DIMENSIONS NOT SHOWN BUT REQUIRED FOR TOOL BUILD, SEE MATH MODEL FOR PRECISE TOOL PATH DATA.

2. THIS PRODUCT IS NOT CATEGORIZED AS AN APPEARANCE ITEM, MINOR IMPERFECTIONS INCLUDING, BUT NOT LIMITED TO, FLOW MARKS, COLOR BLEMISHES, GATE VESTIGE, AND SOFT FLASH THAT DO NOT AFFECT THE FIT, FORM, OR FUNCTION OF THE PART ARE PERMISSIBLE PER DPNP-4.7-CS-01.

3. THIS PART ACCEPTS THE FOLLOWING COMPONENTS OR EQUIVALENT:

   SEALS SHOWN ON TAXI 13837480

4. (1.5)X(0.1) RAISED DELPHI CORPORATE BRAND TO BE LOCATED ON ANY EXTERIOR SURFACE, PREFERABLY VISIBLE AT FINAL ASSEMBLY. OPTIONAL CONSTRUCTION TO BE "PED" OR NO LOGO.

33154294	04	AA	102	POLYESTER COMPOUND BLACK	12.75	1.196
13837483	01	AA	101	POLYESTER COMPOUND NATURAL	11.1	1.308
PART NO	REV	N/P	TYPE	MATERIAL SPECIFICATION AND COLOR	ø A	VOLUME (CM³)

A LINE DRAWN THROUGH A PART NUMBER INDICATES THAT PHYSICAL PARTS ARE NOT AVAILABLE FOR ORDERING.

PART NUMBERS THAT DO NOT HAVE A LINE PRESENT INDICATE THAT PHYSICAL PARTS ARE AVAILABLE FOR ORDERING.

CONTACT DELPHI SALES TO ASSURE AVAILABILITY OF PARTS.

DWG TYPE: PART DRAWING

STYLE:

VOLUME (CU*): SEE CHART

DISTR CODE:

UNLESS OTHERWISE SPECIFIED

THIS DOCUMENT IS IN ACCORDANCE WITH ASME Y14.5M-1994 AS AMENDED BY THE GM GLOBAL DIMENSIONING AND TOLERANCING ADDENDUM-2001. SEPARATE PATTERNS OF FEATURES MAY BE BASED SEPARATELY RESHAPELESS OF DATUM REFERENCES.

ALL DIMENSIONS ARE IN MILLIMETERS

(2) PROCESS SENSITIVE DIMENSION

DIMENSIONS ENCLOSED IN ( ) INDICATE REFERENCE DIMENSIONS AND NO TOLERANCE LIMITS ARE ESTABLISHED.

REFERENCE

DIMENSIONAL RANGE (MM)									CHART EI
FROM	> 0	> 20	> 30	> 70	> 100	> 150	> 200	> 250	> 300
TO	20	30	70	100	150	200	250	300	400
TOLERANCE UNLESS OTHERWISE SPECIFIED									
	±0.15	±0.2	±0.3	±0.4	±0.5	±0.6	±0.8	±1	±1.2
ANGULAR TOLERANCE ±2°									

THIRD ANGLE PROJECTION

DO NOT SCALE

USE MATH DATA

NX

DELPHI

DELPHI PACKARD ELECTRICAL/ELECTRONIC ARCHITECTURE
WARREN, OH

COPYRIGHT 2014 DELPHI CORPORATION AND/OR ITS AFFILIATES.
ALL RIGHTS RESERVED.
REVISED 2015

THIS DRAWING IS THE PROPRIETARY OF DELPHI CORPORATION AND CONTAINS DELPHI CONFIDENTIAL INFORMATION. THE REPRODUCTION, DISTRIBUTION AND UTILIZATION OF THIS DOCUMENT OR ITS RELATED CAD MATH DATA, AS WELL AS COMMUNICATION OF ANY CONTENT TO OTHERS, WITHOUT EXPRESS AUTHORIZATION, IS PROHIBITED.

	DATE
DR	
APVD1 CARLOS DELGADILLO	12MR14
APVD2 J. VILLAMIL	12MR14
APVD3 RAFAEL LOPEZ	12MR14
APVD4	
APVD5	

SUBSTANCES OF CONCERN AND RECYCLED CONTENT PER DELPHI 1094900I

MATERIAL: SEE CHART

DRAWING NAME: TAXI LOCK SECONDARY TPA PWR PACK

DRAWING NUMBER: 33154311

SIZE	SCALE	FRAME NO	SHEET NO	STG	REV	N/P
A0	5:1	1 OF 1	1 OF 1	R	05	-

User: STEVE1
File: 33154311-CV301-301
Message:
Date: 29-Apr-16 Time: 07:34