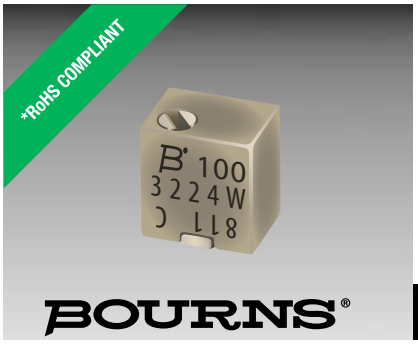

Features

- Surface Mount 4 mm Square / Multiturn Cermet / Industrial / Sealed
- Halogen free** with date code 114
- Sealed to withstand board wash processing
- Pick and place centering design, with flush adjustment
- 4mm design meets EIA/EIAJ/IPC/VECI SMD standard trimmer footprint
- Low CRV - 1 %
- RoHS compliant* - see processing information on RoHS compliant surface mount trimmers
- For trimmer applications/processing guidelines, click here

3224 - 4 mm SMD Trimpot® Trimming Potentiometer

Electrical Characteristics

Standard Resistance Range ..... 10 to 2 megohm (see standard resistance table)
Resistance Tolerance .....±10 % std.
Absolute Min. Resistance.....1 % or 2.0 ohms (whichever is greater)
Contact Resistance Variation .....1 % or 3 ohms max.
Resolution .....Essentially Infinite
Insulation Resistance .....500 vdc. 100 megohms min.
Dielectric Strength
Sea Level.....600 vac (1 minute)
Adjustment Angle ..... 12 turns nom.

Environmental Characteristics

Power Rating (300 volts max.)
85 °C.....0.25 watt
150 °C.....0 watt
Temperature Range .....-65 °C to +150 °C
Temperature Coefficient .....±100 ppm/°C
Seal Test ..... 85 °C Fluorinert†/60 seconds
Humidity .....MIL-STD 202 Method 106 TRS ±2 %; IR 10 megohms
Vibration ..... 20 G TRS±1 %; VRS ±1 %
Shock ..... 100 G TRS ±1 %; VRS±1 %
Load Life.... @ 85 °C rated power 1,000 hours TRS.....3 ohms or 3 % (whichever is greater)
Rotational Cycling ..... 200 cycles TRS.....3 ohms or 3 % (whichever is greater)
Thermal Shock ..... 5 cycles TRS±2 %; VRS±1 %
Moisture Sensitivity Level..... N/A
ESD Classification 2

Physical Characteristics

Mechanical Stop .....Wiper idles
Torque..... 180 g-cm max.
Weight .....Approximately 0.01 oz.
Marking..... Manufacturer's code, resistance code and date code
Solderability..... Per MIL-STD-202, Method 208
Wiper .....50 % (Actual TR) ±10 %
Flammability UL94V0
Pushover Strength
J, G .....4.4 lbs.
W, X .....1 lb.
Adjustment Tool..... H-91

DIMENSIONS: MM (INCHES)
TOLERANCES: ± 0.25 (.010) EXCEPT WHERE NOTED

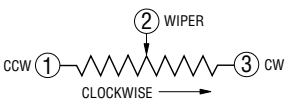

Product Dimensions

3224J Side Adjust

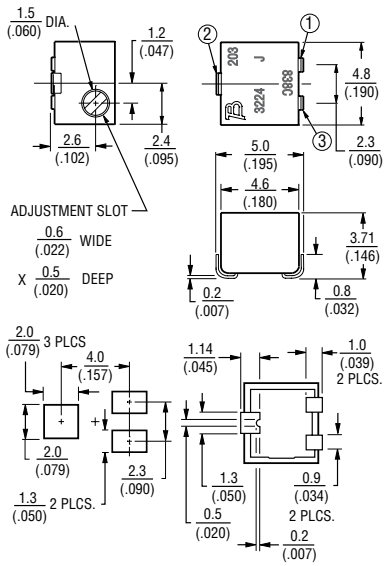

3224G Side Adjust

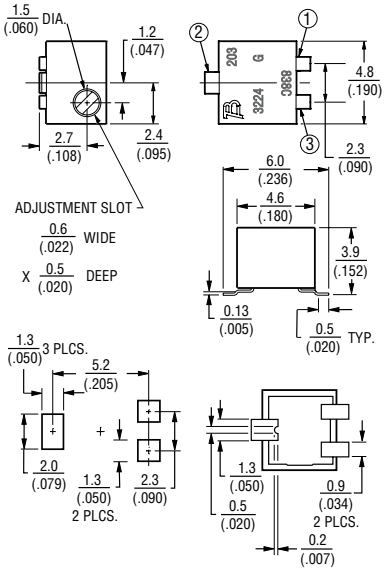

3224W Top Adjust

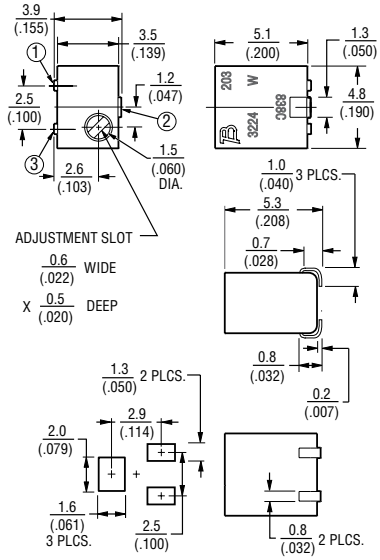

DIMENSIONS: MM (INCHES)

3224X Top Adjust

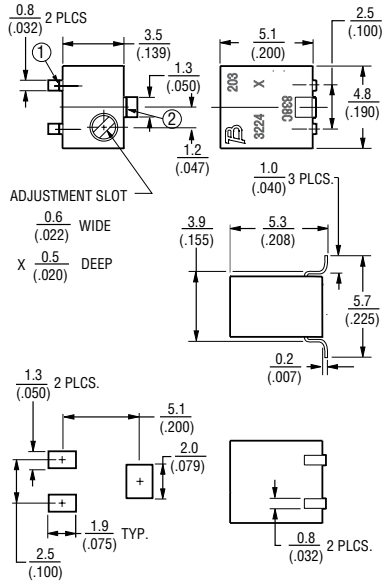

* RoHS Directive 2015/863, Mar. 31, 2015 and Annex
** Bourns follows the prevailing definition of "halogen free" in the industry. Bourns considers a product to be "halogen free" if (a) the Bromine (Br) content is 900 ppm or less; (b) the Chlorine (Cl) content is 900 ppm or less; and (c) the total Bromine (Br) and Chlorine (Cl) content is 1500 ppm or less.
"Trimpot" is a trademark of Bourns, Inc. †"Fluorinert" is a registered trademark of 3M Co.

Specifications are subject to change without notice. Users should verify actual device performance in their specific applications. The products described herein and this document are subject to specific legal disclaimers as set forth on the last page of this document, and at www.bourns.com/docs/legal/disclaimer.pdf.

WARNING Cancer and Reproductive Harm
www.P65Warnings.ca.gov

Additional Features

- Top and side adjust styles
- J-hook, and gull-wing

3224 - 4 mm SMD Trimpot® Trimming Potentiometer

BOURNS®

Packaging Specifications

J & G Styles

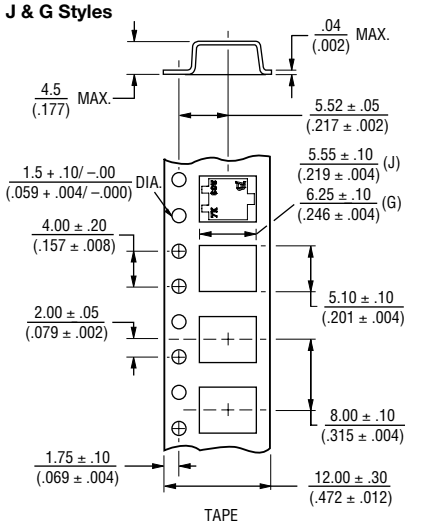

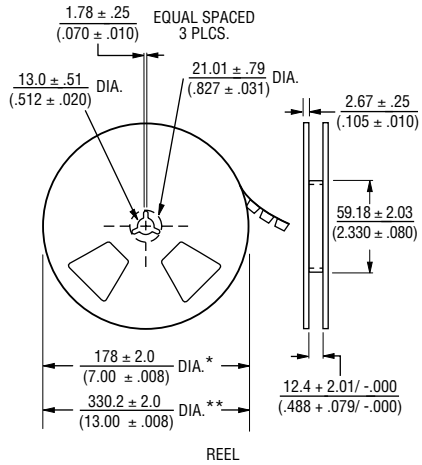

* Embossed Tape Designator "E"
**Embossed Tape Designator "G"
(See How To Order chart for further information.)

Cover tape peel strength: Meets EIA specification 481.

W Style

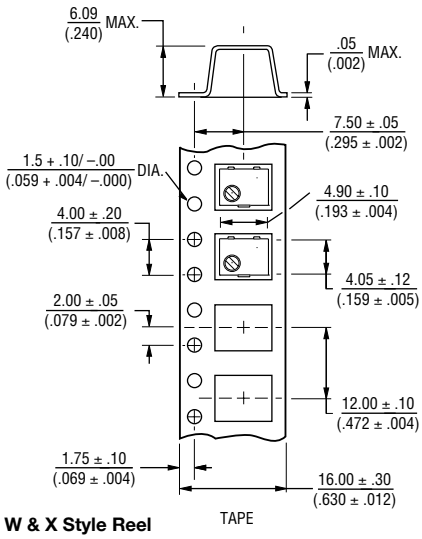

W & X Style Reel

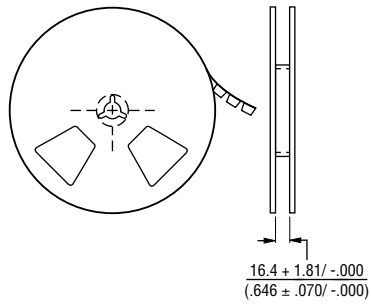

* Embossed Tape Designator "E"
**Embossed Tape Designator "G"
(See How To Order chart for further information.)

Cover tape peel strength: Meets EIA specification 481.

X Style

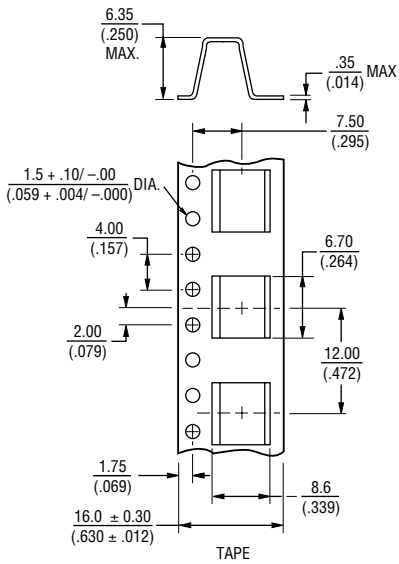

How To Order

3224 J - 1 - 502 E

Model
Style
Standard or Modified Product Indicator
-1= IR Reflow (standard)
†-2= Wave Solderable
-FW5= .070 ” ± .010 ” Shaft Extension
Resistance Code
Embossed Tape Designator
E = Style J, G: 500 pcs./7 ” reel (standard)
Style W: 250 pcs./7 ” reel (standard)
Style X: 200 pcs./7 ” reel (standard)
G = Style J, G: 1500 pcs./13 ” reel (standard)
Style W: 1000 pcs./13 ” reel (standard)
Style X: 850 pcs./13 ” reel (standard)
Blank = Style J, G: 1500 pcs./13 ” reel (FW5)
Style W, X: 600 pcs./13 ” reel (FW5)

Consult factory for other available options.
† -2 has a treated stainless steel shaft.

Tape and reel material meets Antistatic ANSI/ ESD 5541-2003 packaging standards.

Standard Resistance Table

Resistance (Ohms)	Resistance Code
10	100
20	200
50	500
100	**101**
200	**201**
500	**501**
1,000	**102**
2,000	**202**
5,000	**502**
10,000	**103**
20,000	**203**
50,000	**503**
100,000	**104**
200,000	204
500,000	504
1,000,000	105
2,000,000	205

Popular distribution values listed in boldface.
Special resistances available.

REV. 08/19

“Trimpot” is a registered trademark of Bourns, Inc. Specifications are subject to change without notice. Users should verify actual device performance in their specific applications. The products described herein and this document are subject to specific legal disclaimers as set forth on the last page of this document, and at www.bourns.com/docs/legal/disclaimer.pdf.

Legal Disclaimer Notice

BOURNS®

This legal disclaimer applies to purchasers and users of Bourns® products manufactured by or on behalf of Bourns, Inc. and its affiliates (collectively, "Bourns").

Unless otherwise expressly indicated in writing, Bourns® products and data sheets relating thereto are subject to change without notice. Users should check for and obtain the latest relevant information and verify that such information is current and complete before placing orders for Bourns® products.

The characteristics and parameters of a Bourns® product set forth in its data sheet are based on laboratory conditions, and statements regarding the suitability of products for certain types of applications are based on Bourns' knowledge of typical requirements in generic applications. The characteristics and parameters of a Bourns® product in a user application may vary from the data sheet characteristics and parameters due to (i) the combination of the Bourns® product with other components in the user's application, or (ii) the environment of the user application itself. The characteristics and parameters of a Bourns® product also can and do vary in different applications and actual performance may vary over time. Users should always verify the actual performance of the Bourns® product in their specific devices and applications, and make their own independent judgments regarding the amount of additional test margin to design into their device or application to compensate for differences between laboratory and real world conditions.

Unless Bourns has explicitly designated an individual Bourns® product as meeting the requirements of a particular industry standard (e.g., ISO/TS 16949) or a particular qualification (e.g., UL listed or recognized), Bourns is not responsible for any failure of an individual Bourns® product to meet the requirements of such industry standard or particular qualification. Users of Bourns® products are responsible for ensuring compliance with safety-related requirements and standards applicable to their devices or applications.

Bourns® products are not recommended, authorized or intended for use in nuclear, lifesaving, life-critical or life-sustaining applications, nor in any other applications where failure or malfunction may result in personal injury, death, or severe property or environmental damage. Unless expressly and specifically approved in writing by two authorized Bourns representatives on a case-by-case basis, use of any Bourns® products in such unauthorized applications might not be safe and thus is at the user's sole risk. Life-critical applications include devices identified by the U.S. Food and Drug Administration as Class III devices and generally equivalent classifications outside of the United States.

Bourns expressly identifies those Bourns® standard products that are suitable for use in automotive applications on such products' data sheets in the section entitled "Applications." Unless expressly and specifically approved in writing by two authorized Bourns representatives on a case-by-case basis, use of any other Bourns® standard products in an automotive application might not be safe and thus is not recommended, authorized or intended and is at the user's sole risk. If Bourns expressly identifies a sub-category of automotive application in the data sheet for its standard products (such as infotainment or lighting), such identification means that Bourns has reviewed its standard product and has determined that if such Bourns® standard product is considered for potential use in automotive applications, it should only be used in such sub-category of automotive applications. Any reference to Bourns® standard product in the data sheet as compliant with the AEC-Q standard or "automotive grade" does not by itself mean that Bourns has approved such product for use in an automotive application.

Bourns® standard products are not tested to comply with United States Federal Aviation Administration standards generally or any other generally equivalent governmental organization standard applicable to products designed or manufactured for use in aircraft or space applications. Bourns expressly identifies Bourns® standard products that are suitable for use in aircraft or space applications on such products' data sheets in the section entitled "Applications." Unless expressly and specifically approved in writing by two authorized Bourns representatives on a case-by-case basis, use of any other Bourns® standard product in an aircraft or space application might not be safe and thus is not recommended, authorized or intended and is at the user's sole risk.

The use and level of testing applicable to Bourns® custom products shall be negotiated on a case-by-case basis by Bourns and the user for which such Bourns® custom products are specially designed. Absent a written agreement between Bourns and the user regarding the use and level of such testing, the above provisions applicable to Bourns® standard products shall also apply to such Bourns® custom products.

Users shall not sell, transfer, export or re-export any Bourns® products or technology for use in activities which involve the design, development, production, use or stockpiling of nuclear, chemical or biological weapons or missiles, nor shall they use Bourns® products or technology in any facility which engages in activities relating to such devices. The foregoing restrictions apply to all uses and applications that violate national or international prohibitions, including embargos or international regulations. Further, Bourns® products and Bourns technology and technical data may not under any circumstance be exported or re-exported to countries subject to international sanctions or embargoes. Bourns® products may not, without prior authorization from Bourns and/or the U.S. Government, be resold, transferred, or re-exported to any party not eligible to receive U.S. commodities, software, and technical data.

To the maximum extent permitted by applicable law, Bourns disclaims (i) any and all liability for special, punitive, consequential, incidental or indirect damages or lost revenues or lost profits, and (ii) any and all implied warranties, including implied warranties of fitness for particular purpose, non-infringement and merchantability.

For your convenience, copies of this Legal Disclaimer Notice with German, Spanish, Japanese, Traditional Chinese and Simplified Chinese bilingual versions are available at:

Web Page: http://www.bourns.com/legal/disclaimers-terms-and-policies

PDF: http://www.bourns.com/docs/Legal/disclaimer.pdf