Part Number : 367660002
Product Description : MLX Power Connector Header, 6.35mm Pitch, Pin Terminals, 2.13mm Contact Diameter, Vertical, with Plastic Polarizing Peg, 3 Circuits, Nylon 94V-2, Natural (Translucent), Lead-Free
Series Number : 43255
Status : Active
Product Category : PCB Headers and Receptacles

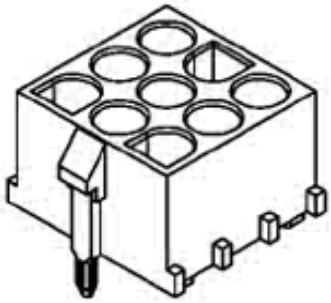

Documents and Resources

Drawings

367660002_sd.pdf

PK-36518-292-001.pdf

3D Models and Design Files

STEP AP242

SOLIDWORKS

Creo

Symbol and Footprint (Multi-Format)

Specifications

PSX-42002-0001-001.pdf

Product Environment Compliance

Compliance

GADSL/IMDS	Not Relevant
China RoHS	per SJ/T 11365-2006
EU ELV	Not Relevant
Low-Halogen Status	Low-Halogen per IEC 61249-2-21
REACH SVHC	Not Contained per D(2025)7771-DC (04 Feb 2026)
EU RoHS	Compliant per EU 2015/863

Compliance Statements

- EU RoHS
- REACH SVHC
- Low-Halogen

Industry Documents
- IPC 1752A Class C
- IPC 1752A Class D
- Molex Product Compliance Declaration
- IEC-62474
- chemSHERPA (xml)

Substances of Interest
- PFAS

EU RoHS Certificate of Compliance

Additional Product Compliance Information

Part Details

General

Status	Active
Category	PCB Headers and Receptacles
Series	43255
Description	MLX Power Connector Header, 6.35mm Pitch, Pin Terminals, 2.13mm Contact Diameter, Vertical, with Plastic Polarizing Peg, 3 Circuits, Nylon 94V-2, Natural (Translucent), Lead-Free
Application	Wire-to-Board
Comments	High Vibration Application
Component Type	PCB Header
Product Name	MLX
UPC	884982397811

Agency

CSA	LR19980
UL	E29179

Electrical

Current - Maximum per Contact	12.0A
Voltage - Maximum	600V

Physical

Breakaway	No
Circuits (Loaded)	3
Circuits (maximum)	3
Color - Resin	Natural (Translucent)
Durability (mating cycles max)	50
First Mate / Last Break	No
Glow-Wire Capable	No
Keying to Mating Part	No
Lock to Mating Part	Yes
Material - Metal	Phosphor Bronze
Material - Plating Mating	Tin
Material - Plating Termination	Tin
Material - Resin	Nylon
Net Weight	2.016/g
Number of Rows	1
Orientation	Vertical
Packaging Type	Bag
PCB Locator	Yes
PCB Retention	Yes
PCB Thickness - Recommended	1.60mm
PC Tail Length	4.30mm
Pitch - Mating Interface	6.35mm
Pitch - Termination Interface	6.35mm
Plating min - Mating	3.500µm
Plating min - Termination	3.500µm
Polarized to Mating Part	Yes
Polarized to PCB	Yes
Shrouded	Shrouded
Stackable	No
Temperature Range - Operating	-55° to +105°C
Termination Interface Style	Through Hole

Solder Process Data

Lead-Free Process Capability	WAVE

Mates With / Use With

Mates with Part(s)

Description	Part Number
2.13mm Diameter MLX Power Crimp Housing Plugs	42021