molex

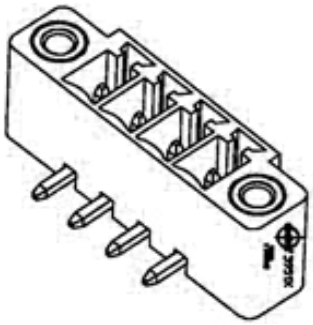

Part Number : 395166009
Product Description : 3.81mm Pitch Eurostyle Right-Angle PCB Header, with Threaded Retention Inserts, Green Housing, 9 Circuits
Series Number : 39516
Status : Active
Product Category : Terminal Blocks and Barrier Strip

Documents & Resources

Drawings

395166009_sd.pdf

PK-39516-001-001.pdf

3D Models and Design Files

STEP AP242

SOLIDWORKS

Creo

Specifications

PS-39500-001-001.pdf

Product Environment Compliance

Compliance

GADSL/IMDS	Not Relevant
China RoHS	Not Relevant
EU ELV	Not Relevant
Low-Halogen Status	Not Reviewed per IEC 61249-2-21
REACH SVHC	Contains Lead per D(2025)4165-DC (25 June 2025)
EU RoHS	Compliant with Exemption 6(c) per EU 2015/863

Compliance Statements

- EU RoHS

- REACH SVHC
- Low-Halogen

Industry Documents
- IPC 1752A Class C
- IPC 1752A Class D
- Molex Product Compliance Declaration
- IEC-62474
- chemSHERPA (xml)

Substances of Interest
- PFAS

EU RoHS Certificate of Compliance

Additional Product Compliance Information

Part Details

General

Status	Active
Category	Terminal Blocks and Barrier Strip
Series	39516
Description	3.81mm Pitch Eurostyle Right-Angle PCB Header, with Threaded Retention Inserts, Green Housing, 9 Circuits
Application	Wire-to-Board
Component Type	PCB Header
Product Name	Eurostyle Pluggable
Type	PCB Terminal Blocks and Connectors
UPC	822350446679

Agency

UL	E48521

Electrical

Current - Maximum per Contact	8.0A
Voltage - Maximum	300V

Physical

Circuits (Loaded)	9
Circuits (maximum)	9
Color - Resin	Green
Entry Angle	N/A
Lock to Mating Part	Yes
Number of Rows	1
Orientation	Horizontal
Panel Mount	No
PCB Thickness - Recommended	2.50mm
PC Tail Length	3.50mm
Pitch - Mating Interface	3.81mm
Pitch - Termination Interface	3.81mm
Polarized to Mating Part	Yes
Shrouded	Fully
Stackable	No
Temperature Range - Operating	-40° to +105°C
Wire Size (AWG)	N/A

Mates With / Use With

Mates with Part(s)

Description	Part Number
3.81mm Pitch Eurostyle Horizontal Plugs	39514
3.81mm Pitch Eurostyle Vertical Plugs	39517
Mates With	Most 3.81mm Pitch Industry Standard Plugs