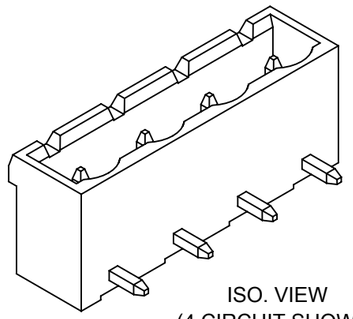

ISO. VIEW
(4 CIRCUIT SHOWN)
(SCALE 2:1)

B

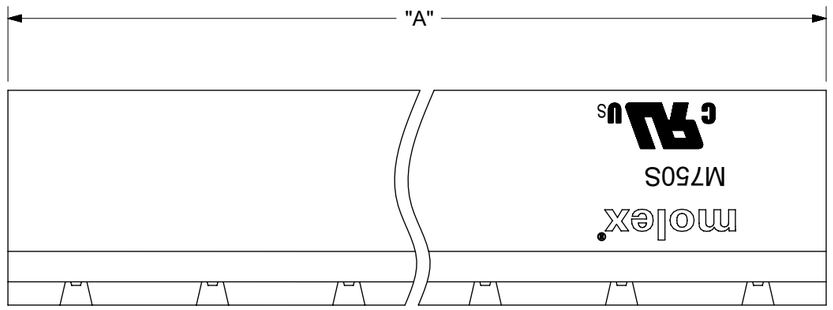

PART NUMBER DATA							
CIRCUITS	PART NUMBER	ENGINEERING NUMBER	COLOR	DIM. "A"		DIM. "B"	
				IN	MM	IN	MM
2	397230002	M750S-02-5-02-3	GREEN	.60	15.2	.300	7.62
3	397230003	M750S-02-5-03-3	GREEN	.90	22.9	.600	15.24
4	397230004	M750S-02-5-04-3	GREEN	1.20	30.5	.900	22.86
5	397230005	M750S-02-5-05-3	GREEN	1.50	38.1	1.200	30.48
6	397230006	M750S-02-5-06-3	GREEN	1.80	45.7	1.500	38.10
7	397230007	M750S-02-5-07-3	GREEN	2.10	53.3	1.800	45.72
8	397230008	M750S-02-5-08-3	GREEN	2.40	61.0	2.100	53.34
9	397230009	M750S-02-5-09-3	GREEN	2.70	68.6	2.400	60.96
10	397230010	M750S-02-5-10-3	GREEN	3.00	76.2	2.700	68.58
11	397230011	M750S-02-5-11-3	GREEN	3.30	83.8	3.000	76.20
12	397230012	M750S-02-5-12-3	GREEN	3.60	91.4	3.300	83.82

REF. LAST 2 DIGITS OF PART NUMBER EQUALS NUMBER OF POLES

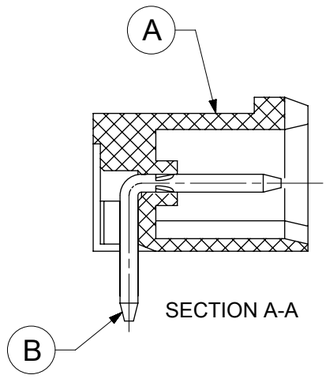

SECTION A-A

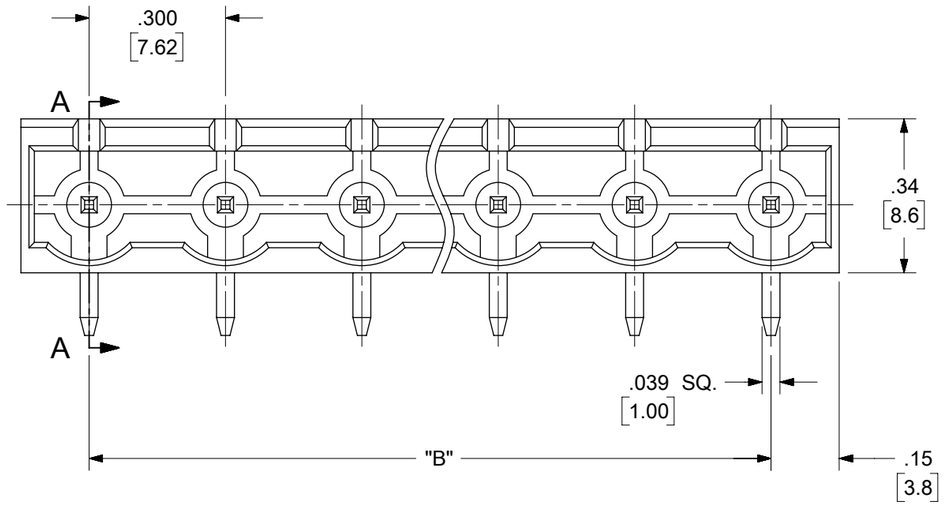

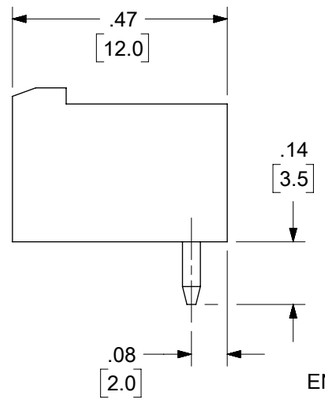

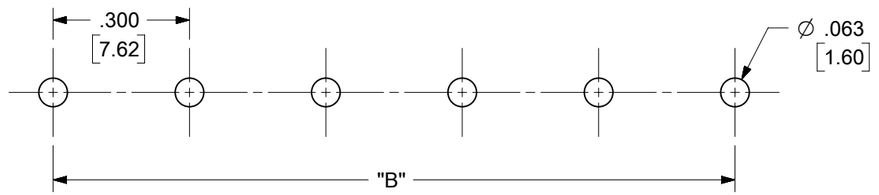

PCB LAYOUT

ENGINEERING NUMBER LEGEND

M750S -02-5- XX - 3

SERIES
STYLE
PITCH
POLES
COLOR

** CONTACT FACTORY FOR ADDITIONAL LENGTHS AND COLORS NOT SHOWN

B

SPECIFICATIONS:

1. MATERIAL:
   (A). BODY: PA66, UL94 V-0
   (B). PC TERMINAL: TIN PLATED BRASS
2. MAXIMUM ELECTRICAL RATING PER UL: 300V, 8A
3. DIELECTRIC VOLTAGE WITHSTAND: 2500VAC FOR 1 MINUTE
4. INSULATION RESISTANCE: 500VDC, 500MΩ
5. IMPULSE VOLTAGE: 4000V ± 5 TIMES EACH
6. MAXIMUM OPERATING TEMPERATURE: -40°C TO +115°C
7. MAXIMUM SOLDER TEMPERATURE: 260°C FOR 5 SECONDS

TOLERANCES			
MM	TOL	INCH	TOL
0-6	±0.25	0-.24	±.010
>6-30	±0.40	.24-1.18	±.016
>30-120	±0.50	1.18-4.76	±.020
>120	±0.80	>4.76	±.031

THIS DRAWING CONTAINS INFORMATION THAT IS PROPRIETARY TO MOLEX ELECTRONIC TECHNOLOGIES, LLC AND SHOULD NOT BE USED WITHOUT WRITTEN PERMISSION

FUNCTIONAL SYMBOLS: EA = 0; EC = 0; EP = 0

DIVISIONAL SYMBOLS

DIMENSION UNITS: INCH/MM
SCALE: 3:1

GENERAL TOLERANCES (UNLESS SPECIFIED)

	MM	INCH
4 PLACES	± ---	± ---
3 PLACES	± ---	± SEE CHART
2 PLACES	± SEE CHART	± SEE CHART
1 PLACE	± SEE CHART	± ---
0 PLACES	± ---	± ---
ANGULAR TOL	± ---	

DRAFT WHERE APPLICABLE MUST REMAIN WITHIN DIMENSIONS

CURRENT REV DESC: ADDED ISOMETRIC VIEW & UPDATED NOTES

EC NO: 862614
DRWN: ADIKAB 2026/06/24
CHK'D: ROLANM 2026/08/11
APPR: HKNEELAND 2026/08/14

INITIAL REVISION:
DRWN: RSTONE 2014/01/23
APPR: JFMURPHY 2014/10/16

THIRD ANGLE PROJECTION | DRAWING: B-SIZE | SERIES: 39723

molex

7.62MM EURO HEADER
RIGHT ANGLE CLOSED END

PRODUCT CUSTOMER DRAWING

DOCUMENT NUMBER	DOC TYPE	DOC PART	REVISION
SD-39723-001	PSD	001	B

MATERIAL NUMBER	CUSTOMER	SHEET NUMBER
SEE TABLE	GENERAL MARKET	1 OF 1

DOCUMENT STATUS	P1	RELEASE DATE	2026/08/14 23:00:13

FORMAT: Eng-lega-master-tb-prod-B
REVISION: E1
DATE: 2021/05/01