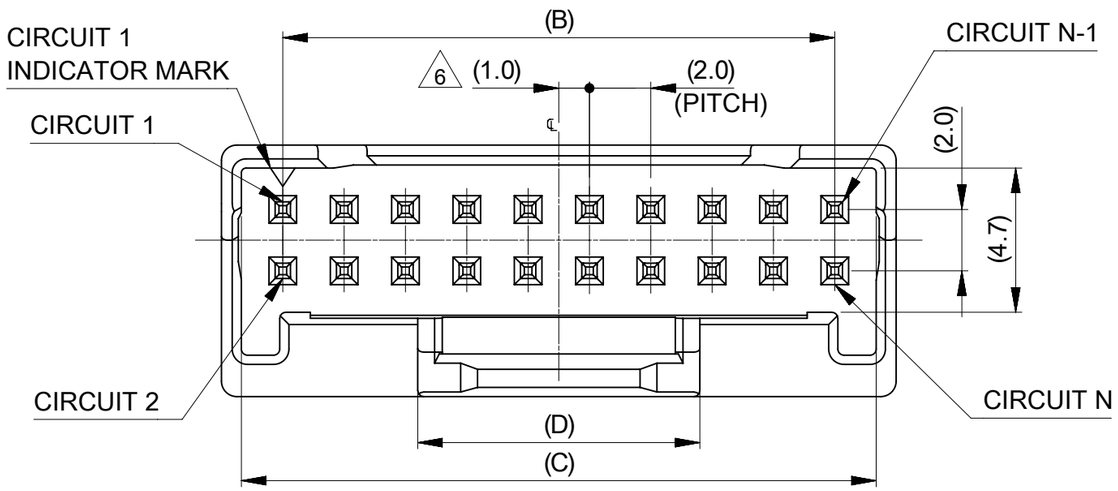

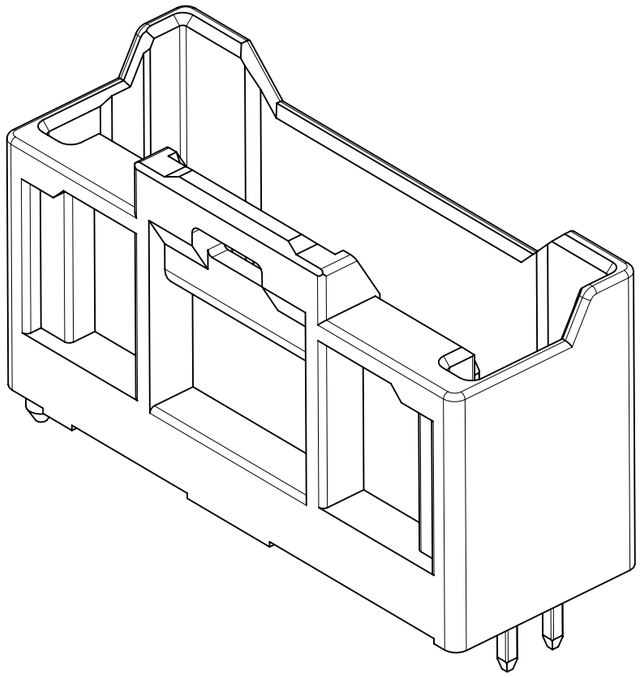

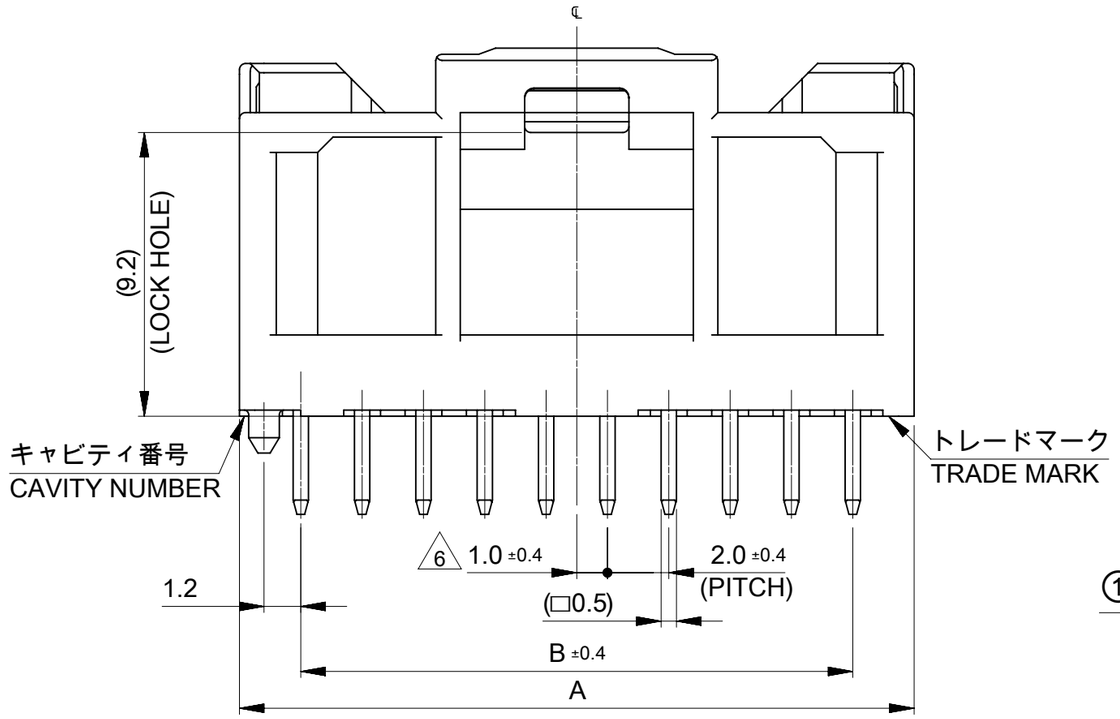

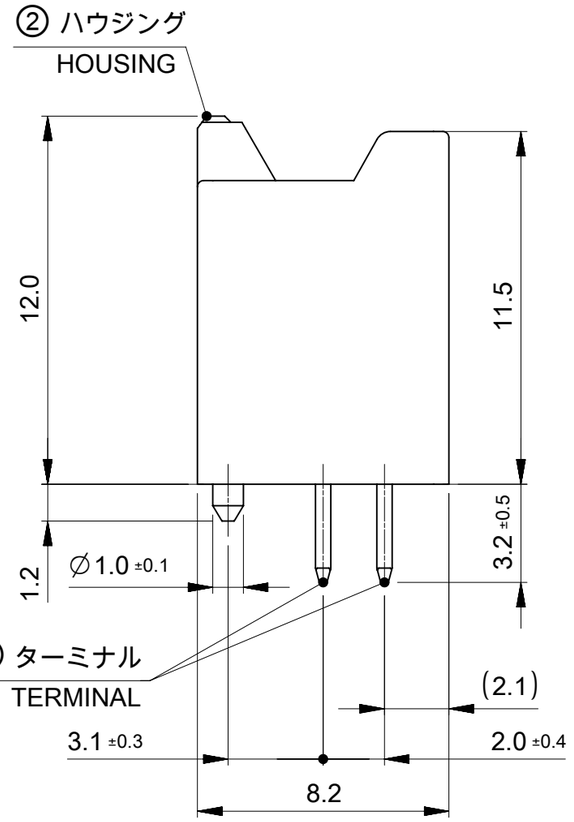

9.2	40.7	38	42	40
9.2	38.7	36	40	38
9.2	36.7	34	38	36
9.2	34.7	32	36	34
9.2	32.7	30	34	32
9.2	30.7	28	32	30
9.2	28.7	26	30	28
9.2	26.7	24	28	26
9.2	24.7	22	26	24
9.2	22.7	20	24	22
9.2	20.7	18	22	20
9.2	18.7	16	20	18
9.2	16.7	14	18	16
9.2	14.7	12	16	14
9.2	12.7	10	14	12
7.3	10.7	8	12	10
D	C	B	A	極数 CIRCUIT SIZE

1 TABLE 1

番号 No.	部品 PART	材質 MATERIAL	
①	ターミナル TERMINAL	母材 BASE MATERIAL	黄銅, BRASS
		下地めっき UNDER PLATING	ニッケルめっき 1.0 MICRO-METER MIN NICKEL PLATING 1.0 MICRO-METER MIN
		コンタクト CONTACT	金めっき 0.1 MICRO-METER MIN GOLD PLATING 0.1 MICRO-METER MIN
		テール SOLDER TAIL	
②	ハウジング HOUSING	ポリアミド(PA)ガラス入り, UL94V-0, 色: SEE CHART POLYAMIDE(PA) GLASS FILLED, UL94V-0, COLOR : SEE CHART	

DOCUMENT STATUS	P1	RELEASE DATE	2023/07/07 04:35:53

THIS DRAWING CONTAINS INFORMATION THAT IS PROPRIETARY TO MOLEX ELECTRONIC TECHNOLOGIES, LLC AND SHOULD NOT BE USED WITHOUT WRITTEN PERMISSION

DIMENSION UNITS	SCALE
mm	NTS

GENERAL TOLERANCES (UNLESS SPECIFIED)

ANGULAR TOL	± 3.0 °
4 PLACES	± 0.2
3 PLACES	± 0.2
2 PLACES	± 0.2
1 PLACE	± 0.2
0 PLACES	± 0.2

DRAFT WHERE APPLICABLE MUST REMAIN WITHIN DIMENSIONS

CURRENT REV DESC:

EC NO: 755147
DRWN: SNAKAMURA08 2023/06/27
CHK'D: MARAI 2023/07/07
APPR: AIDA 2023/07/07

INITIAL REVISION:
DRWN: SNAKAMURA08 2018/03/15
APPR: TKANEKO 2018/03/30

THIRD ANGLE PROJECTION | DRAWING: A3-SIZE | SERIES: 503091

molex

IGRID 2.0 PLUG ASSEMBLY
VERTICAL GOLD PLATING

PRODUCT CUSTOMER DRAWING

DOCUMENT NUMBER	DOC TYPE	DOC PART	REVISION
5030910000-SD	PSD	000	E

MATERIAL NUMBER	CUSTOMER	SHEET NUMBER
SEE SHEET3	GENERAL	1 OF 3

FORMAT: master-lb-prod-A3
REVISION: J1
DATE: 2021/05/01

NOTES.

1. 材料及び仕上げ(めっき仕様) : TABLE 1 参照
   MATERIAL AND FINISHES : SEE TABLE 1
2. 製品仕様書 : 5016460000-PS 000 / 5016461000-PS 000
   PRODUCT SPECIFICATION:5016460000-PS 000 / 5016461000-PS 000
3. 嵌合相手:
   MATES WITH:

リセプタクルハウジング RECEPTACLE HOUSING	501646 SERIES	
圧着端子 RECEPTACLE CRIMP TERMINAL	AWG #22-24 金めっき AWG #22-24 GOLD PLATING	503095 2201
	AWG #26-28 金めっき AWG #26-28 GOLD PLATING	503095 2200

4. アプリケーション仕様書(コネクタ取扱い説明書) : 5016460000 PS A01
   APPLICATION SPECIFICATION(CONNECTOR MANNUAL): 5016460000 PS A01
5. 本製品は金めっき品です。
   THIS PRODUCT IS A GOLD PLATING.
6. 極数/2 = 偶数に適応
   APPLY FOR CIRCUIT SIZE / 2 =EVEN
7. 梱包仕様書: 5030919200-SPK 200
   PACKING INFORMATION : 5030919200-SPK 200
8. 発注番号 : SHEET 3 参照
   ORDER No. : PLEASE REFER TO SHEET 3 FOR PRODUCT LIST

503091 ** 2 *

極数 CIRCUIT SIZE	ハウジングカラー HOUSING COLOR
	0:ナチュラル NATURAL (白 WHITE)
	1:黒 BLACK

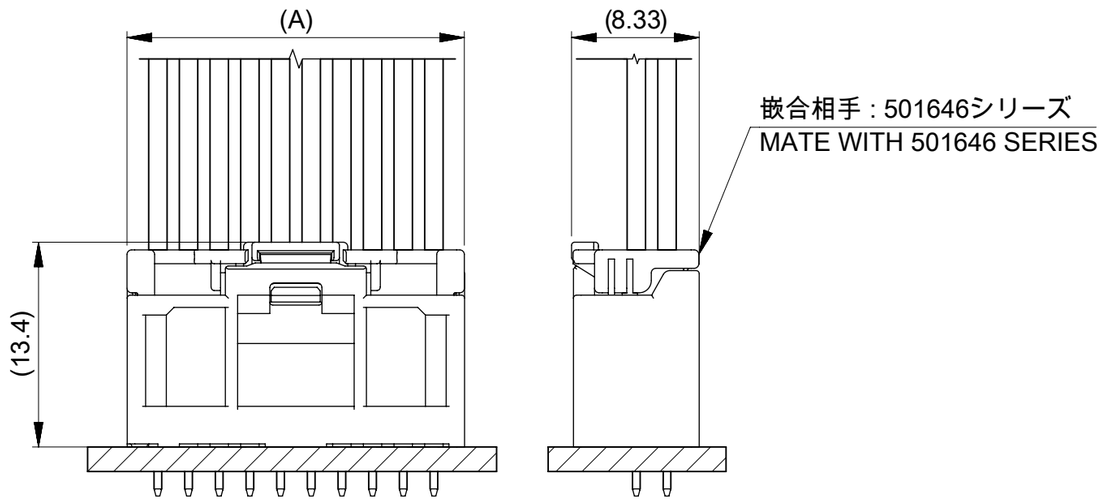

嵌合状態図
MATED CONNECTORS

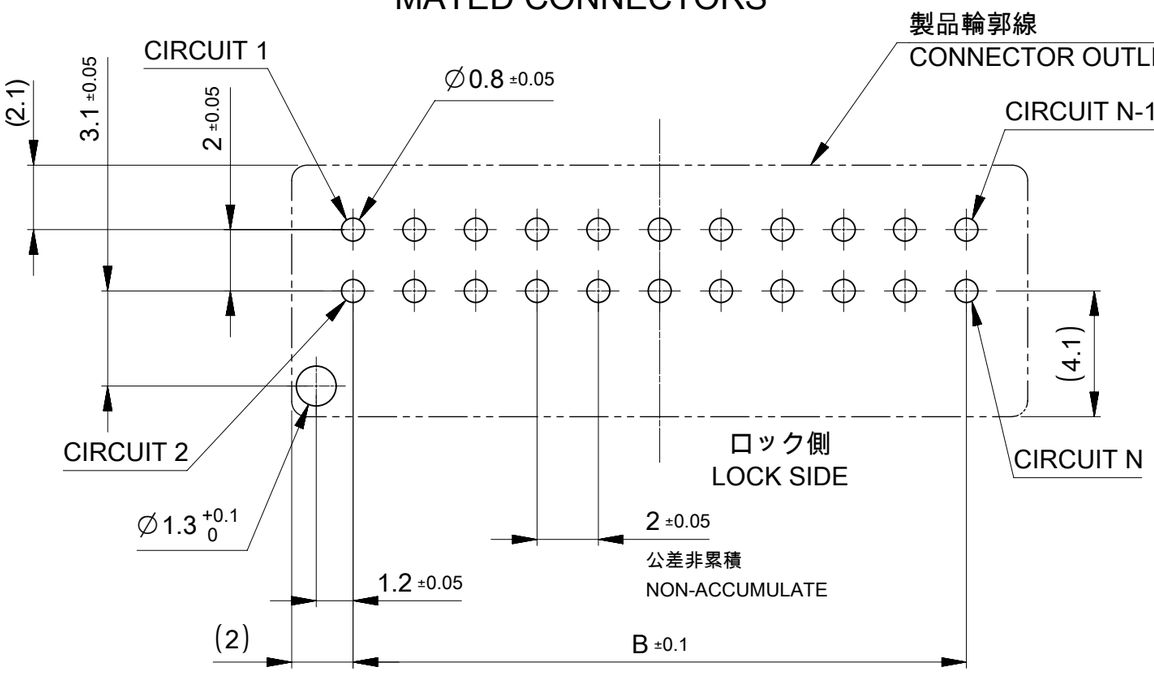

基板取付穴推奨寸法(マウント面)
POLARIZED RECOMMENDED PCB LAYOUT HOLE DIMENSION (MOUNTING SIDE)

参考基板厚 t=1.2~1.6
REFERENCE PCB THICKNESS t=1.2~1.6

THIS DRAWING CONTAINS INFORMATION THAT IS PROPRIETARY TO MOLEX ELECTRONIC TECHNOLOGIES, LLC AND SHOULD NOT BE USED WITHOUT WRITTEN PERMISSION

DIMENSION UNITS	SCALE
mm	NTS

GENERAL TOLERANCES (UNLESS SPECIFIED)

ANGULAR TOL	±	3.0 °
4 PLACES	±	0.2
3 PLACES	±	0.2
2 PLACES	±	0.2
1 PLACE	±	0.2
0 PLACES	±	0.2

DRAFT WHERE APPLICABLE MUST REMAIN WITHIN DIMENSIONS

CURRENT REV DESC:

EC NO: 755147
DRWN: SNAKAMURA08 2023/06/27
CHK'D: MARAI 2023/07/07
APPR: AIDA 2023/07/07

INITIAL REVISION:
DRWN: SNAKAMURA08 2018/03/15
APPR: TKANEKO 2018/03/30

THIRD ANGLE PROJECTION | DRAWING: A3-SIZE | SERIES: 503091

molex

IGRID 2.0 PLUG ASSEMBLY
VERTICAL GOLD PLATING

PRODUCT CUSTOMER DRAWING

DOCUMENT NUMBER	DOC TYPE	DOC PART	REVISION
5030910000-SD	PSD	000	E

MATERIAL NUMBER	CUSTOMER	SHEET NUMBER
SEE SHEET3	GENERAL	2 OF 3

DOCUMENT STATUS	P1	RELEASE DATE	2023/07/07 04:35:53

FORMAT: master-lb-prod-A3
REVISION: J1
DATE: 2021/05/01

各極数毎の製品形状
PRODUCT SHAPE AT EACH CIRCUIT

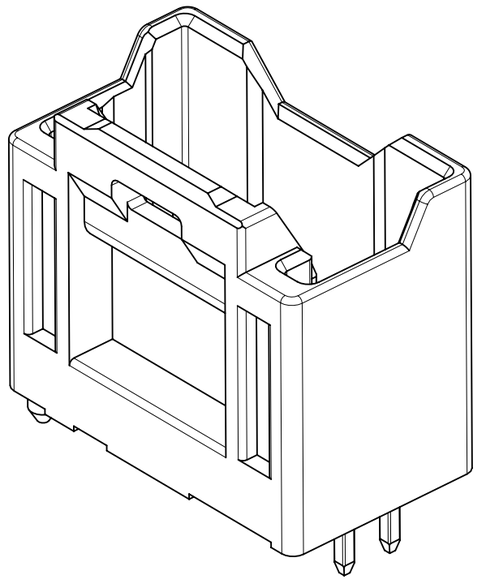

10 ~ 12極形状
VIEW OF 10~12 CIRCUIT

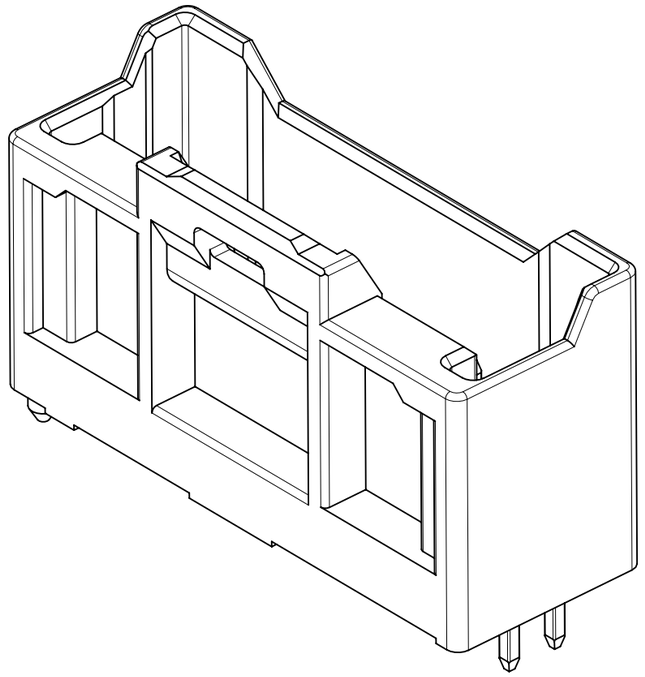

14 ~ 40極形状
VIEW OF 14~40 CIRCUIT

△8 製品一覧 PRODUCT LIST

黒 : BLACK	ナチュラル : NATURAL (白 : WHITE)	色 COLOR
503091 4021	503091 4020	40
3821	3820	38
3621	3620	36
3421	3420	34
3221	3220	32
3021	3020	30
2821	2820	28
2621	2620	26
2421	2420	24
2221	2220	22
2021	2020	20
1821	1820	18
1621	1620	16
1421	1420	14
1221	1220	12
503091 1021	503091 1020	10
発注番号 ORDER No.		極数 CIRCUIT SIZE
PACKAGING STYLE : TRAY		

THIS DRAWING CONTAINS INFORMATION THAT IS PROPRIETARY TO MOLEX ELECTRONIC TECHNOLOGIES, LLC AND SHOULD NOT BE USED WITHOUT WRITTEN PERMISSION

DIMENSION UNITS	SCALE
mm	NTS

GENERAL TOLERANCES (UNLESS SPECIFIED)

ANGULAR TOL	±	3.0 °
4 PLACES	±	0.2
3 PLACES	±	0.2
2 PLACES	±	0.2
1 PLACE	±	0.2
0 PLACES	±	0.2

DRAFT WHERE APPLICABLE MUST REMAIN WITHIN DIMENSIONS

CURRENT REV DESC:

EC NO: 755147
DRWN: SNAKAMURA08 2023/06/27
CHK'D: MARAI 2023/07/07
APPR: AIDA 2023/07/07

INITIAL REVISION:
DRWN: SNAKAMURA08 2018/03/15
APPR: TKANEKO 2018/03/30

molex

IGRID 2.0 PLUG ASSEMBLY
VERTICAL GOLD PLATING

PRODUCT CUSTOMER DRAWING

DOCUMENT NUMBER	DOC TYPE	DOC PART	REVISION
5030910000-SD	PSD	000	E

THIRD ANGLE PROJECTION	DRAWING	SERIES	MATERIAL NUMBER	CUSTOMER	SHEET NUMBER
	A3-SIZE	503091	SEE CHART	GENERAL	3 OF 3

DOCUMENT STATUS	P1	RELEASE DATE	2023/07/07 04:35:53

FORMAT: master-lb-prod-A3
REVISION: J1
DATE: 2021/05/01