Part Number : 739447216
Product Description : HDM Board-to-Board Backplane Header, Vertical, SMC, Solder Tail, Guide Pin Option, Guide Post Location B, Polarizing Key Position N/A, 144 Circuits
Series Number : 73944
Status : Active
Product Category : Backplane Connectors

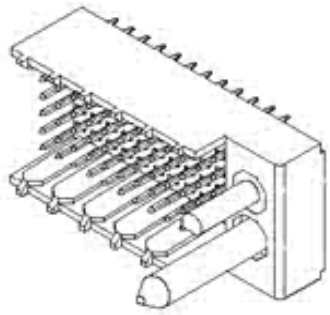

Documents & Resources

Drawings

739447216_sd.pdf

PK-70873-0818-001.pdf

3D Models and Design Files

STEP AP242

SOLIDWORKS

Creo

Specifications

AS-73642-9998-001.pdf

PS-73670-9999-001.pdf

Product Environment Compliance

Compliance

GADSL/IMDS	Not Relevant
China RoHS	per SJ/T 11365-2006
EU ELV	Not Relevant
Low-Halogen Status	Low-Halogen per IEC 61249-2-21
REACH SVHC	Not Contained per D(2025)4165-DC (25 June 2025)
EU RoHS	Compliant per EU 2015/863

Compliance Statements

- EU RoHS
- REACH SVHC
- Low-Halogen

Industry Documents
- IPC 1752A Class C
- IPC 1752A Class D
- Molex Product Compliance Declaration
- IEC-62474
- chemSHERPA (xml)

Substances of Interest
- PFAS

EU RoHS Certificate of Compliance

Additional Product Compliance Information

Part Details

General

Status	Active
Category	Backplane Connectors
Series	73944
Description	HDM Board-to-Board Backplane Header, Vertical, SMC, Solder Tail, Guide Pin Option, Guide Post Location B, Polarizing Key Position N/A, 144 Circuits
Application	Backplane
Component Type	PCB Header
Product Name	HDM
UPC	800754876551

Agency

CSA	LR19980
UL	E29179

Electrical

Current - Maximum per Contact	1.0A
Data Rate	1.0 Gbps
Shielded	No

Voltage - Maximum	250V AC

Physical

Circuits (Loaded)	144
Circuits (maximum)	144
Color - Resin	Black, Natural
Durability (mating cycles max)	250
First Mate / Last Break	No
Flammability	94V-0
Guide to Mating Part	Yes
Keying to Mating Part	Yes
Material - Metal	Phosphor Bronze, Stainless Steel
Material - Plating Mating	Gold
Material - Plating Termination	Tin
Material - Resin	High Temperature Thermoplastic
Net Weight	9.000/g
Number of Columns	24
Number of Pairs	Open Pin Field
Number of Rows	6
Orientation	Vertical
Packaging Type	Tube
PCB Locator	Yes
PCB Retention	None
PCB Thickness - Recommended	2.50mm
PC Tail Length	3.50mm
Pitch - Mating Interface	2.00mm
Pitch - Termination Interface	2.00mm
Plating min - Mating	0.762µm
Plating min - Termination	2.540µm
Polarized to PCB	No
Stackable	No
Temperature Range - Operating	-55° to +105°C
Termination Interface Style	Through Hole

Mates With / Use With

Mates with Part(s)

Description	Part Number
HDM Daughtercard Receptacles	73632
HDM Vertical Daughtercard Receptacles	73780

Application Tooling

Global

Description	Part Number
Extraction Tool	621001000