HC-EVO-B06-SHWS-2SSM32-PLRBK - Housing

1407623

https://www.phoenixcontact.com/nl/products/1407623

Please be informed that the data shown in this PDF document is generated from our online catalog. Please find the complete data in the user documentation. Our general terms of use for downloads are valid.



Surface mounting housing B6, with single locking latch, material: PA 6.6-FR, cable outlets: 2, lateral, 2x M32, height: 74 mm, cable gland: none, Standard

Product description

One screw connection opening is closed, however can be opened using a screwdriver

Your advantages

- Lower costs than metal version
- Low weight
- Lower risk of condensation

Commercial data

Item number	1407623
Packing unit	1 pc
Minimum order quantity	1 pc
Sales key	AF7APL
Product key	AF7APL
GTIN	4046356776851
Weight per piece (including packing)	130,7 g
Weight per piece (excluding packing)	127,9 g
Customs tariff number	85389099
Country of origin	PL

Technical data

Notes

General	For contact inserts HC-B6, BB10, DD24, M

Product properties

Housing type	Surface mounting housing
Product family	HC-EVO-B
Application	Standard
Type	B6
No. of cable outlets	2
Type of the screw connection	2x M32
Cable outlet	lateral
Pg screw connection	none

Dimensions

Dimensional drawing	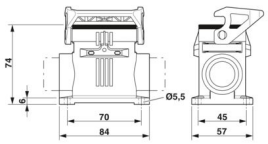
Width	57 mm
Height	74 mm
Length	84 mm
Hole diameter	5.5 mm

Material specifications

Flammability rating according to UL 94	V0 (Housing)
	V0 (Interlock)
Seal material	NBR
Housing material	PA 6.6-FR
Locking latch material	PA

Mechanical properties

Mechanical data

Type of the screw connection	2x M32
Locking type	Latch

Connection data

Tightening torque	2 Nm ... 3 Nm (for M5 mounting screws on the surface-mount housing)

Mounting

Assembly note	One of the two openings for the screw connections is sealed but

	can be broken open using a screwdriver.

Environmental and real-life conditions

Ambient conditions

Degree of protection	IP66
Enclosure rating (NEMA)	12 (UL 50e)
Impact strength	IK08
Ambient temperature (operation)	-40 °C ... 125 °C

Drawings

Dimensional drawing

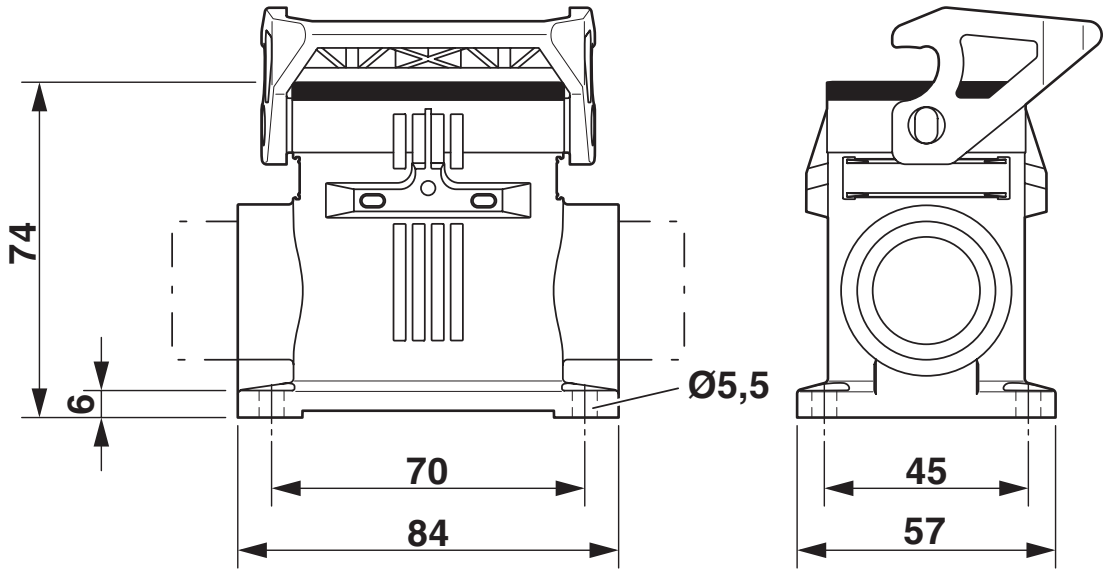

Dimensional drawing

Approvals

To download certificates, visit the product detail page: https://www.phoenixcontact.com/nl/products/1407623

DNV
Approval ID: TAE000037S

cUL Recognized
Approval ID: E255026

UL Recognized
Approval ID: E255026

EAC
Approval ID: RU C-DE.AI30.B.01102

Classifications

ECLASS

ECLASS-13.0	27440202
ECLASS-15.0	27440202

ETIM

ETIM 10.0	EC000437

UNSPSC

UNSPSC 21.0	31261500

Environmental product compliance

EU RoHS

Fulfills EU RoHS substance requirements	Yes, No exemptions

China RoHS

Environment friendly use period (EFUP)	EFUP-E
	No hazardous substances above the limits

EU REACH SVHC

REACH candidate substance (CAS No.)	No substance above 0.1 wt%

EF3.1 Climate Change

CO2e kg	0,99 kg CO2e

Phoenix Contact 2026 © - all rights reserved
https://www.phoenixcontact.com

PHOENIX CONTACT B.V.
Hengelder 56 6902 PA Zevenaar
Postbus 246 6900 AE Zevenaar
(0316) 59 17 20
sales@phoenixcontact.nl