HC-B-G-M20-PLRBK - Cable gland

1407669

https://www.phoenixcontact.com/nl/products/1407669

Please be informed that the data shown in this PDF document is generated from our online catalog. Please find the complete data in the user documentation. Our general terms of use for downloads are valid.



EVO plastic cable gland with bayonet locking, for housing series B, size M20, cable diameter: 7 mm ... 13 mm

Commercial data

Item number	1407669
Packing unit	1 pc
Minimum order quantity	1 pc
Sales key	AF7APL
Product key	AF7APL
GTIN	4046356776370
Weight per piece (including packing)	34,7 g
Weight per piece (excluding packing)	32,343 g
Customs tariff number	39269097
Country of origin	PL

Technical data

Mounting

Assembly note	Bayonet locking max. 3x can be removed

Product properties

No. of conductors	1
Type of the screw connection	M20
Shielded	no

Dimensions

Dimensional drawing	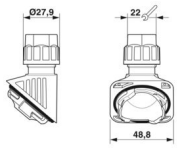
Width	48.7 mm
Height	59 mm
Depth	60.5 mm
Wrench size, union nut	22 mm

Material specifications

Color	black (RAL 9005)
Material Pressure screw	PA
Flammability rating according to UL 94	V0 (Seal)
	V2 (Housing)
Seal material O-ring	NBR
Seal material Cable seal	NBR
Material for screw connection	PA

Cable/line

External cable diameter Cable 1	7 mm ... 13 mm

Environmental and real-life conditions

Ambient conditions

Degree of protection	IP66
Enclosure rating (NEMA)	12 (UL 50e)
Ambient temperature (operation)	-40 °C ... 100 °C

Drawings

Dimensional drawing

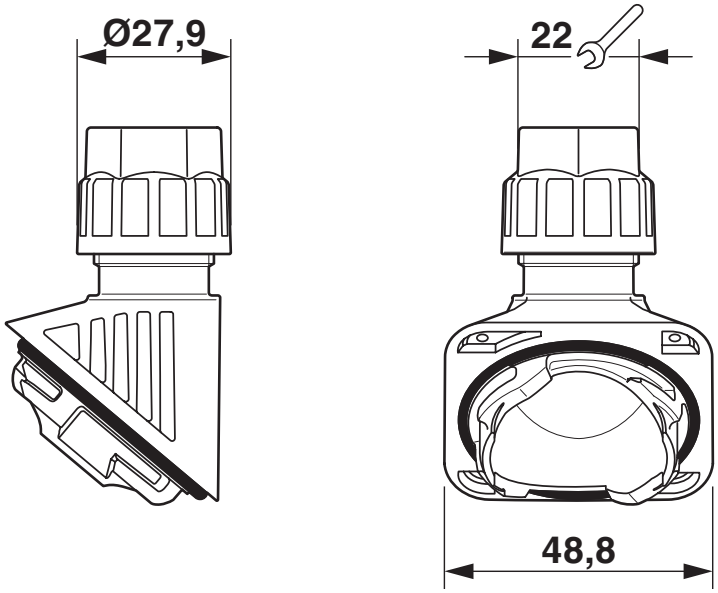

Dimensional drawing

Approvals

To download certificates, visit the product detail page: https://www.phoenixcontact.com/nl/products/1407669

DNV
Approval ID: TAE000037S

cUL Recognized
Approval ID: E255026

UL Recognized
Approval ID: E255026

EAC
Approval ID: RU C-DE.AI30.B.01102

EAC-RoHS
Approval ID: RU D-DE.HB35.B.00387

Classifications

ECLASS

ECLASS-13.0	27140801
ECLASS-15.0	27140801

ETIM

ETIM 10.0	EC000441

UNSPSC

UNSPSC 21.0	39121300

Environmental product compliance

EU RoHS

Fulfills EU RoHS substance requirements	Yes, No exemptions

China RoHS

Environment friendly use period (EFUP)	EFUP-E
	No hazardous substances above the limits

EU REACH SVHC

REACH candidate substance (CAS No.)	No substance above 0.1 wt%

EF3.1 Climate Change

CO2e kg	0,234 kg CO2e

Phoenix Contact 2026 © - all rights reserved
https://www.phoenixcontact.com

PHOENIX CONTACT B.V.
Hengelder 56 6902 PA Zevenaar
Postbus 246 6900 AE Zevenaar
(0316) 59 17 20
sales@phoenixcontact.nl