HC-B 24-A-UT-PEL-M - Terminal adapter

1648060

https://www.phoenixcontact.com/nl/products/1648060

Please be informed that the data shown in this PDF document is generated from our online catalog. Please find the complete data in the user documentation. Our general terms of use for downloads are valid.

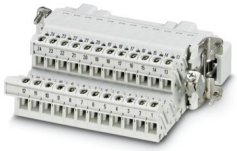

HEAVYCON terminal adapter, pin insert, B24 series, 24-pos., for the left control cabinet panel, screw connection

Commercial data

Item number	1648060
Packing unit	5 pc
Minimum order quantity	5 pc
Sales key	AF7ADC
Product key	AF7ADC
GTIN	4017918969684
Weight per piece (including packing)	197,3 g
Weight per piece (excluding packing)	40 g
Customs tariff number	85366990
Country of origin	CN

Technical data

Notes

General	For HEAVYCON-ADVANCE mounting flange and HEAVYCON panel mounting base of B24 type
General	Connectors may be operated only when there is no load/voltage.

Product properties

Product family	HC-B
Series	HC-B
Type	B24
Number of positions	24
Connection profile	24+PE
Contact numbering	1 - 24
Screwdriver blade	0.5 x 3.5 mm

Insulation characteristics

Overvoltage category	III
Degree of pollution	3

Electrical properties

Rated voltage (III/3)	500 V
Rated surge voltage	6 kV
Rated current	16 A
SCCR	5 kA (UL 2237)

Connection data

Connection technology

Connection technology	Screw connection
Connection in acc. with standard	IEC / EN

Conductor connection

Conductor cross-section	0.5 mm² ... 2.5 mm²
Connection cross section AWG	20 ... 14
Tightening torque	0.5 Nm ... 0.8 Nm
Stripping length of the individual wire	12 mm

Dimensions

Dimensional drawing	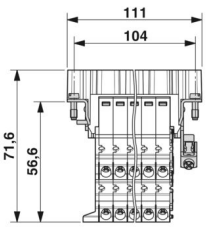
Width	34 mm
Height	71.6 mm
Length	111 mm
Drill hole distance, horizontal	104 mm
Drill hole distance, vertical	27 mm

Material specifications

Flammability rating according to UL 94	V0
Contact material	Copper alloy
Contact surface material	Ag
Contact carrier material	PA
Standards/regulations	PA

Cable/line

Stripping length of the individual wire	12 mm

Mechanical properties

Mechanical data

Insertion/withdrawal cycles	≥ 500

Environmental and real-life conditions

Ambient conditions

Ambient temperature (operation)	-40 °C ... 125 °C

Standards and regulations

Constructional and testing regulations	DIN EN 61984
	DIN EN 60664
	IEC 60352
Tests	DIN EN 61984
	DIN EN 60664
	IEC 60352

Testing

Standards/regulations	PA: Fire protection in rail vehicles - requirement sets R22, R23, and R24 acc. to DIN EN 45545-2 (Risk level HL1 - HL3)

Mounting

Assembly note	To ensure correct use, installation in housing with IP54 protection or better is required
	Connectors may only be actuated when there is no load/voltage.

Drawings

Dimensional drawing

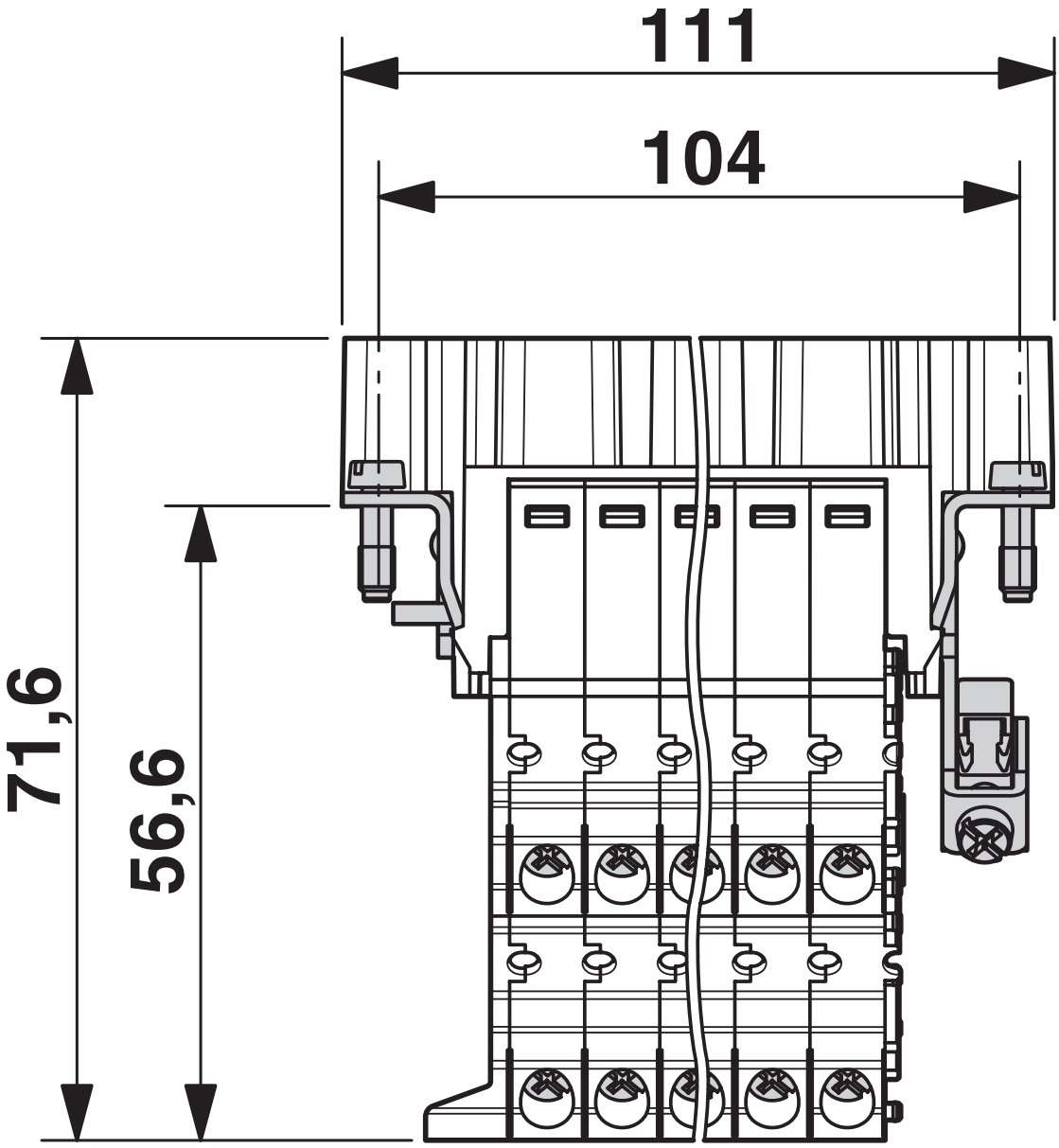

Connection side

Dimensional drawing

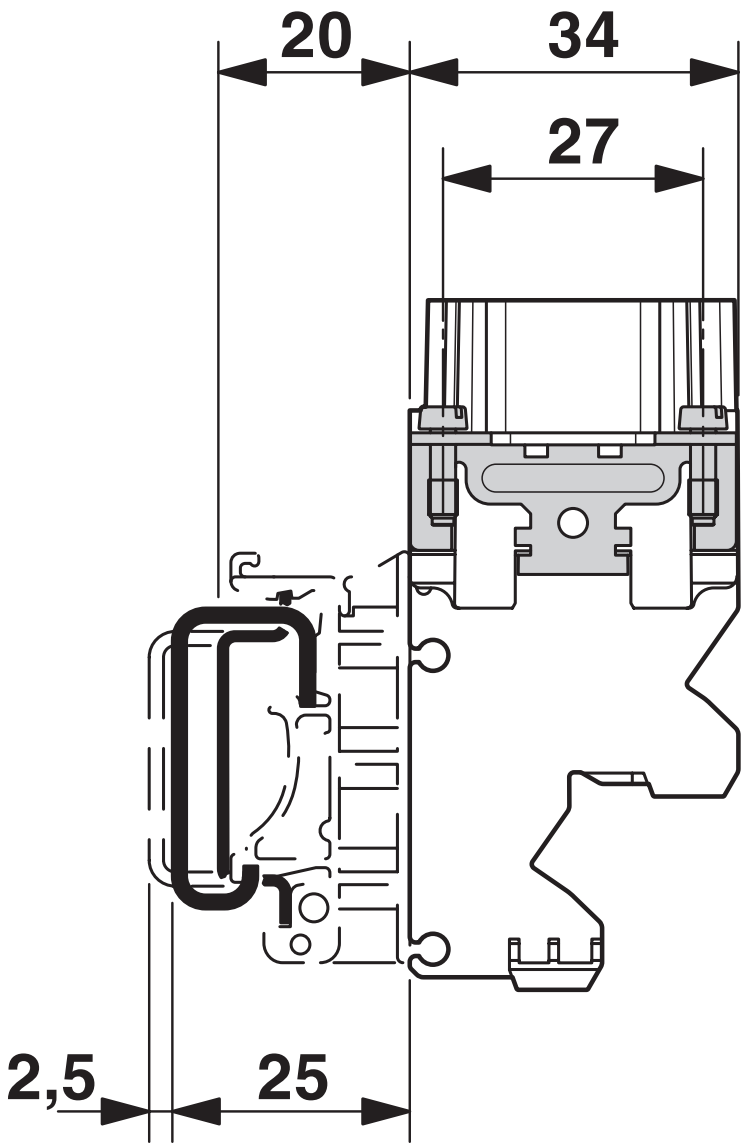

Side view

Application drawing

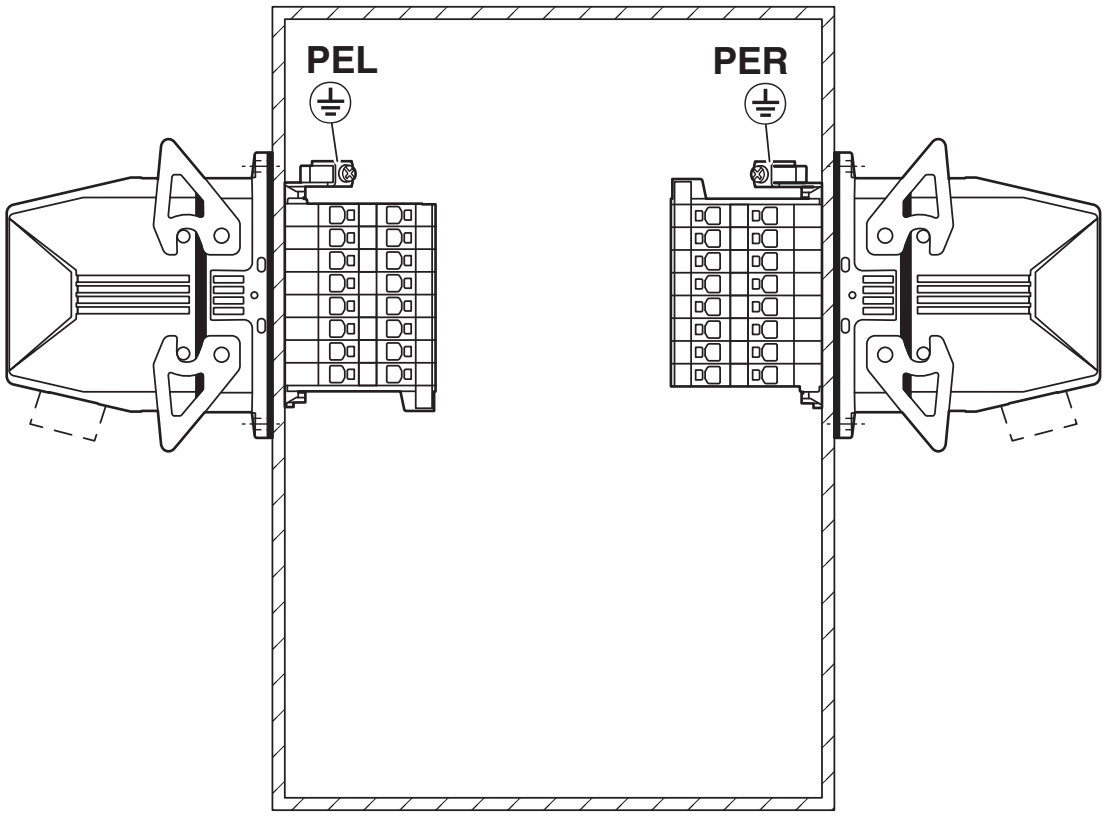

Mounting position PE connection left/right (PEL/PER)

Diagram

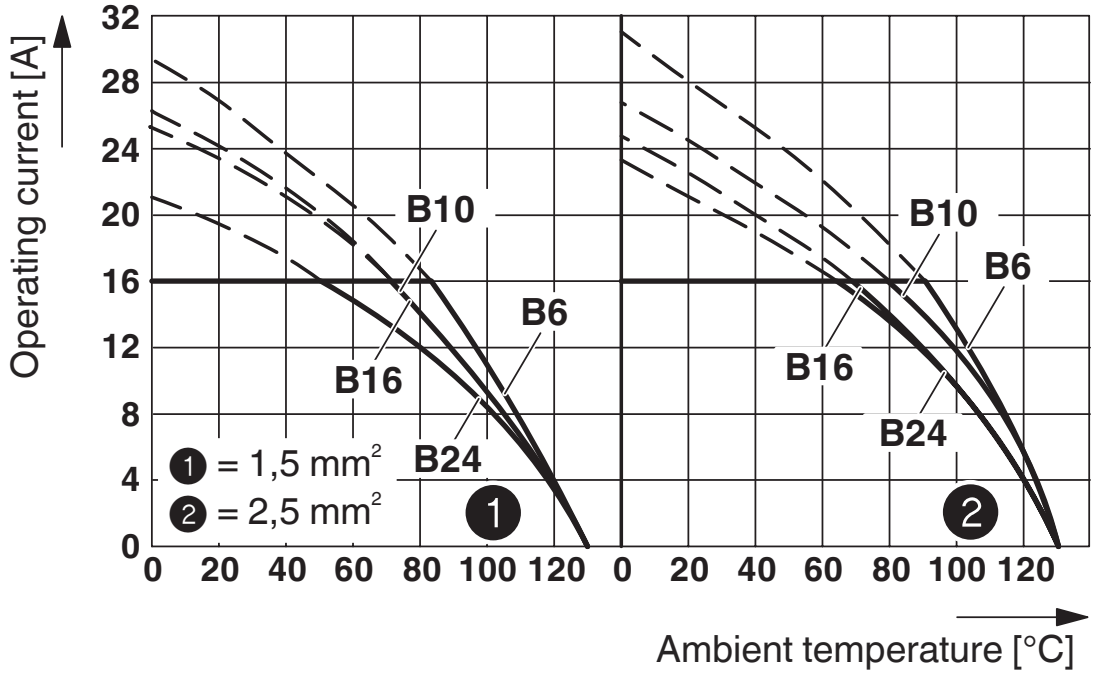

Derating diagram

Approvals

To download certificates, visit the product detail page: https://www.phoenixcontact.com/nl/products/1648060

CSA
Approval ID: 013631_6233_01

	Nominal voltage U_N	Nominal current I_N	Cross section AWG	Cross section mm^2
keine				
	600 V	13 A	22 - 14	-

cUL Recognized
Approval ID: E118976

	Nominal voltage U_N	Nominal current I_N	Cross section AWG	Cross section mm^2
keine				
	600 V	13 A	22 - 14	-

UL Recognized
Approval ID: E118976

	Nominal voltage U_N	Nominal current I_N	Cross section AWG	Cross section mm^2
keine				
	600 V	13 A	22 - 14	-

cULus Recognized
Approval ID: E468743

	Nominal voltage U_N	Nominal current I_N	Cross section AWG	Cross section mm^2
keine				
	600 V	14 A	- 14	-

Classifications

ECLASS

ECLASS-13.0	27440222
ECLASS-15.0	27440222

ETIM

ETIM 10.0	EC000438

UNSPSC

UNSPSC 21.0	39121500

Environmental product compliance

EU RoHS

Fulfills EU RoHS substance requirements	Yes, No exemptions

China RoHS

Environment friendly use period (EFUP)	EFUP-E
	No hazardous substances above the limits

EU REACH SVHC

REACH candidate substance (CAS No.)	No substance above 0.1 wt%

Phoenix Contact 2026 © - all rights reserved
https://www.phoenixcontact.com

PHOENIX CONTACT B.V.
Hengelder 56 6902 PA Zevenaar
Postbus 246 6900 AE Zevenaar
(0316) 59 17 20
sales@phoenixcontact.nl