# CK4,0-ED-2,50ST AG - Crimp contact

1663242

https://www.phoenixcontact.com/nl/products/1663242

Please be informed that the data shown in this PDF document is generated from our online catalog. Please find the complete data in the user documentation. Our general terms of use for downloads are valid.



Crimp contact, series: HC-M-03, Pin, turned, contact diameter: 4 mm, connection cross section: 2.5 $mm^2$ ... 2.5 $mm^2$, AWG 14...14 , contact material: Cu alloy

## Commercial data

| | |
|---|---|
| Item number | 1663242 |
| Packing unit | 25 pc |
| Minimum order quantity | 25 pc |
| Sales key | AF7AIE |
| Product key | AF7AIE |
| GTIN | 4017918123055 |
| Weight per piece (including packing) | 3 g |
| Weight per piece (excluding packing) | 3 g |
| Customs tariff number | 85366990 |
| Country of origin | DE |

## Technical data

### Notes

| | |
|---|---|
| General | for HC-M-02, HC-M-03, HC-M-03/04, HC-M-04, HC-Q02, HC-Q03, HC-Q04, and HC-COM-Q4/2 contact carriers |
| Assembly note | The quality of a crimp connection is determined by DIN EN 60352-2. |

### Product properties

| | |
|---|---|
| Series | HC-M-03 |
| | HC-M-03/04 |
| | HC-M-04 |
| | HC-K |
| | HC-M-02 |
| | HC-HS |
| | HC-COM |
| Contact material type | turned |

### Connection data

Connection technology

| | |
|---|---|
| Contact connection type | Pin |
| Connection method | Crimp connection |

Conductor connection

| | |
|---|---|
| Stripping length | 9 mm |
| Connection cross section | 2.5 mm² ... 2.5 mm² |
| Connection cross section AWG | 14 ... 14 |

### Material specifications

| | |
|---|---|
| Material Contact | Cu alloy |
| Material Contact surface | Ag |

### Dimensions

| | |
|---|---|
| Dimensional drawing | 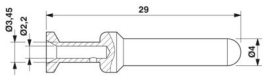 |
| Diameter (Contact diameter) | 4 mm |

### Mechanical properties

Mechanical data

| | |
|---|---|
| Insertion/withdrawal cycles | ≥ 500 |

### Environmental and real-life conditions

Ambient conditions

| | |
|---|---|
| Ambient temperature (operation) | -40 °C ... 125 °C |

## Drawings

Dimensional drawing

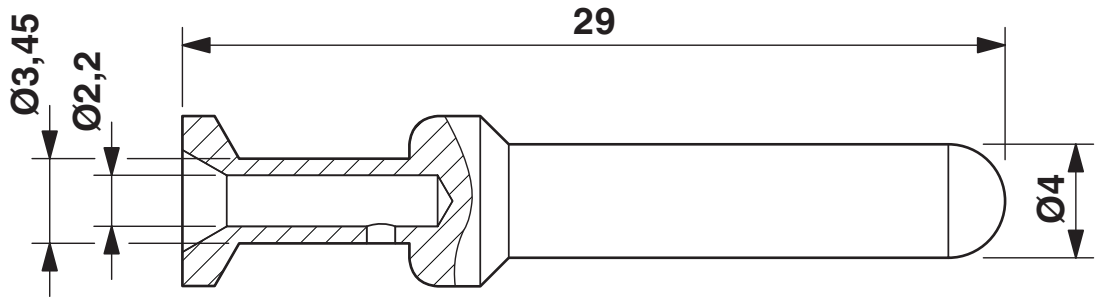


Dimensional drawing

## Approvals

To download certificates, visit the product detail page: https://www.phoenixcontact.com/nl/products/1663242

**EAC**
Approval ID: RU C-DE.AI30.B.01102

## Classifications

### ECLASS

| | |
|---|---|
| ECLASS-13.0 | 27440204 |
| ECLASS-15.0 | 27440204 |

### ETIM

| | |
|---|---|
| ETIM 10.0 | EC000796 |

### UNSPSC

| | |
|---|---|
| UNSPSC 21.0 | 39121500 |

## Environmental product compliance

EU RoHS

| | |
|---|---|
| Fulfills EU RoHS substance requirements | Yes, No exemptions |

China RoHS

| | |
|---|---|
| Environment friendly use period (EFUP) | EFUP-E |
| | No hazardous substances above the limits |

EU REACH SVHC

| | |
|---|---|
| REACH candidate substance (CAS No.) | No substance above 0.1 wt% |

EF3.1 Climate Change

| | |
|---|---|
| CO2e kg | 0,025 kg CO2e |


Phoenix Contact 2026 © - all rights reserved
https://www.phoenixcontact.com



PHOENIX CONTACT B.V.
Hengelder 56 6902 PA Zevenaar
Postbus 246 6900 AE Zevenaar
(0316) 59 17 20
sales@phoenixcontact.nl