AB-SK/E-NS 35 - Support bracket

3213111

https://www.phoenixcontact.com/nl/products/3213111

Please be informed that the data shown in this PDF document is generated from our online catalog. Please find the complete data in the user documentation. Our general terms of use for downloads are valid.



Support bracket, Bracket for busbars, set every 20 cm, depth: 33.7 mm, width: 56 mm, height: 50 mm, number of positions: 2, color: silver-colored, mounting type: DIN rail mounting

Your advantages

- Version for NS 35 DIN rail mounting
- T-shaped support brackets for space-saving direct mounting and free positioning on the mounting panel
- Suitable for SK 5 to SK 14, SKS 8, and SKS 14 shield connection clamps

Commercial data

Item number	3213111
Packing unit	10 pc
Minimum order quantity	10 pc
Sales key	BE7113
Product key	BE7113
GTIN	4046356549172
Weight per piece (including packing)	41,47 g
Weight per piece (excluding packing)	38,548 g
Customs tariff number	76169990
Country of origin	CN

Technical data

Product properties

Number of positions	2

Electrical properties

Nominal current I_N	0 A

Dimensions

Dimensional drawing	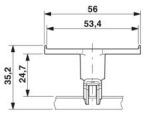
Width	56 mm
Height	50 mm
Depth	33.7 mm

Material specifications

Color	silver-colored
Insulating material	PA

Mounting

Mounting type	DIN rail mounting

Drawings

Dimensional drawing

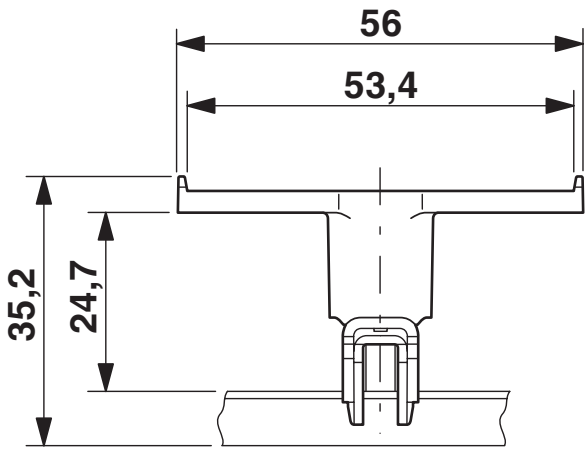

Classifications

ECLASS

ECLASS-13.0	27400607
ECLASS-15.0	27400607

ETIM

ETIM 10.0	EC001166

UNSPSC

UNSPSC 21.0	39121700

Environmental product compliance

EU RoHS

Fulfills EU RoHS substance requirements	Yes, No exemptions

China RoHS

Environment friendly use period (EFUP)	EFUP-E
	No hazardous substances above the limits

EU REACH SVHC

REACH candidate substance (CAS No.)	No substance above 0.1 wt%

EF3.1 Climate Change

CO2e kg	0,427 kg CO2e

Phoenix Contact 2026 © - all rights reserved
https://www.phoenixcontact.com

PHOENIX CONTACT B.V.
Hengelder 56 6902 PA Zevenaar
Postbus 246 6900 AE Zevenaar
(0316) 59 17 20
sales@phoenixcontact.nl