THE INFORMATION CONTAINED HEREIN IS CONSIDERED "PROPRIETARY" TO BEL FUSE INC. AND SHALL NOT BE COPIED, REPRODUCED OR DISCLOSED WITHOUT THE WRITTEN APPROVAL OF BEL FUSE INC.

RoHS

SCHEMATIC

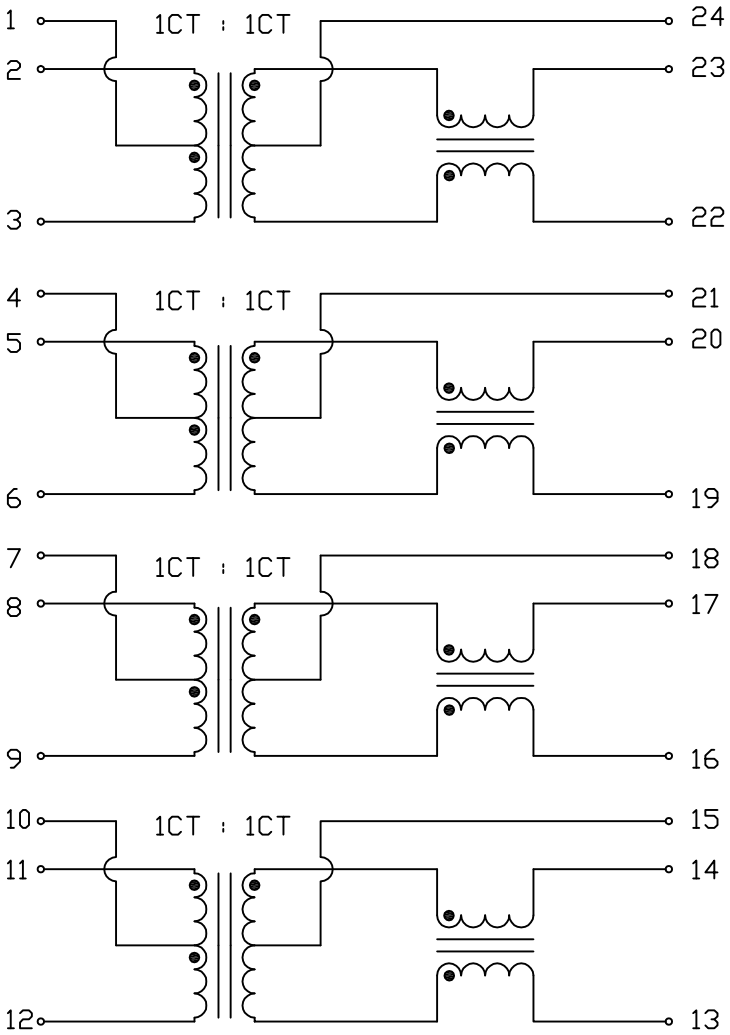

ELECTRICAL CHARACTERISTICS @25°C

TURNS RATIO	1CT : 1CT
PHASE	2 TO 23, 5 TO 20, 8 TO 17, 11 TO 15 IN PHASE
OCL : (2-3), (5-6), (8-9), (11-12)	350uH MIN. AT 100kHz, 100mV WITH 8mA DC BIAS, FROM 0 -70°C
INSERTION LOSS	1.0dB MAX. @ 1MHz TO 100MHz 1.5dB MAX. @ 125MHz
RETURN LOSS MEASURED UNDER A 100Ω I/O	18dB MIN. @ 1-30MHz 15dB MIN. @ 60MHz 12dB MIN. @ 80MHz 10dB MIN. @ 100MHz
CROSSTALK 10-100 MHz	35 dB MIN.
COMMON TO COMMON REJECTION	30 dB MIN. AT 100kHz TO 155MHz
HIPOT	LEAKAGE CURRENT LESS THAN 1mA AT 1500VAC

REV. : A | PAGE : 2

ORIGINATED BY: Alice Pang	DATE: 2021-01-27	TITLE: ELECTRICAL SPECIFICATION S558-5999-AZ-F	PART NO. / DRAWING NO.: S558-5999-AZ-F	STANDARD DIM. TOL. IN INCH: .X, .XX, .XXX	[ ] METRIC DIM. AS REF.
DRAWN BY: ZC Guo	DATE: 2021-01-27		FILE NAME: S5585999AZFA.DWG		UNIT : INCH [mm]
					SCALE : N/A
					SIZE : A4

POWER | PROTECT | CONNECT

This document is electronically generated. This is a controlled copy if used internally

Please read our datasheet & drawing disclaimer here

THE INFORMATION CONTAINED HEREIN IS CONSIDERED "PROPRIETARY" TO BEL FUSE INC. AND SHALL NOT BE COPIED, REPRODUCED OR DISCLOSED WITHOUT THE WRITTEN APPROVAL OF BEL FUSE INC.

RoHS

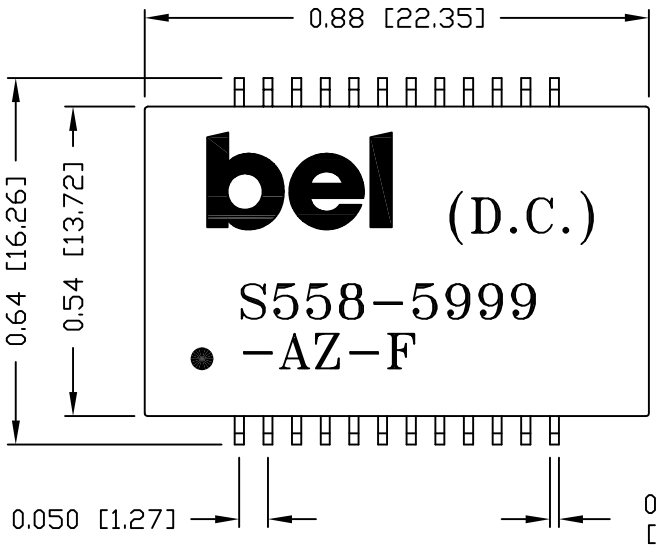

SUGGESTED PCB PAD LAYOUT

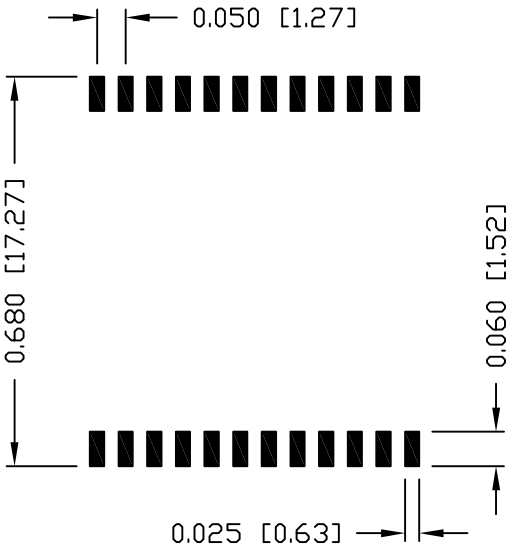

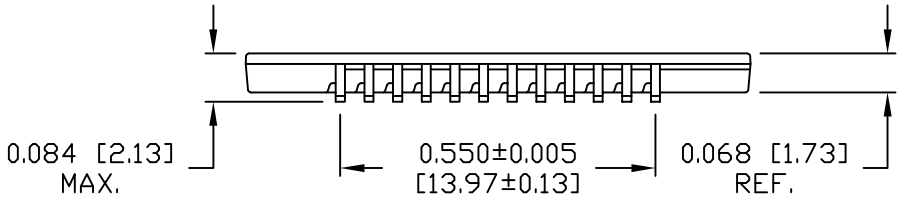

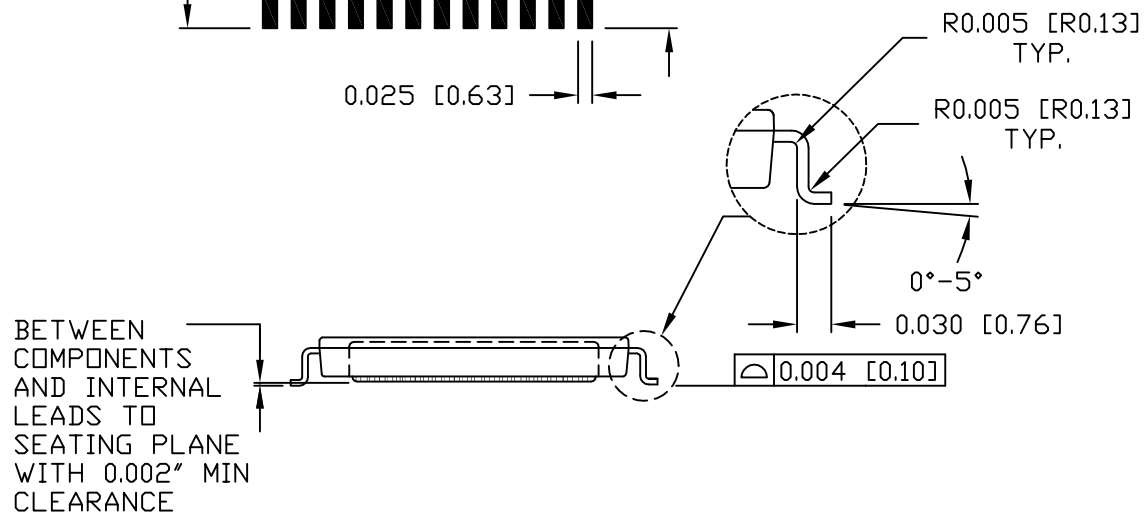

NOTES:

1. STANDARD MARKING REFER TO DOC. HAND-WORK-04.
2. PACKAGE CODE: "RJS001".

ORIGINATED BY / DATE: Lawrence Tsang 2021-01-27	TITLE: MECHANICAL DRAWING S558-5999-AZ-F	PART NO. / DRAWING NO.: S558-5999-AZ-F	STANDARD DIM. TOL. IN INCH: .X / .XX ±0.01 / .XXX ±0.005	[ ] METRIC DIM. AS REF.	REV. : A
DRAWN BY / DATE: ZC Guo 2021-01-27		FILE NAME: S5585999AZFA.DWG		UNIT : INCH [mm]	PAGE : 3
				SCALE : N/A	
				SIZE : A4	

POWER | PROTECT | CONNECT

This document is electronically generated. This is a controlled copy if used internally