THE INFORMATION CONTAINED HEREIN IS CONSIDERED "PROPRIETARY" TO BEL FUSE INC. AND SHALL NOT BE COPIED, REPRODUCED OR DISCLOSED WITHOUT THE WRITTEN APPROVAL OF BEL FUSE INC.

RoHS

SCHEMATIC

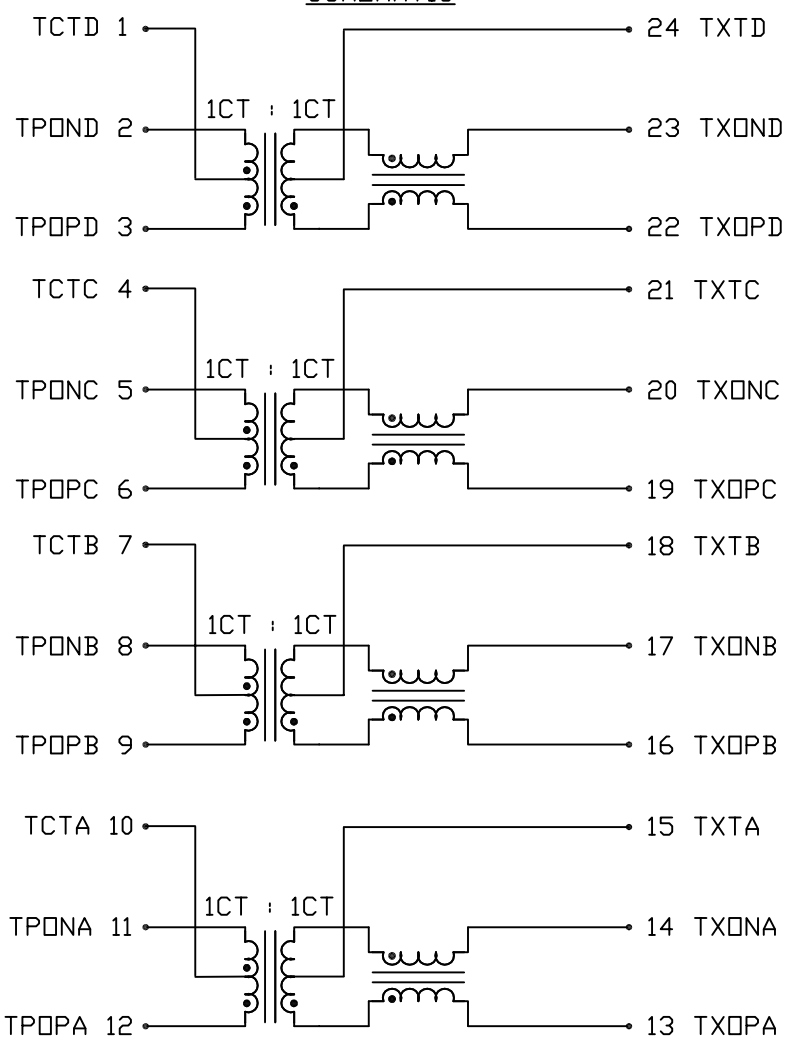

ELECTRICAL CHARACTERISTICS @ 25°C

TURNS RATIO	
PIN(3-1-2) : (22-24-23)	1CT : 1CT
PIN(6-4-5) : (19-21-20)	1CT : 1CT
PIN(9-7-8) : (16-18-17)	1CT : 1CT
PIN(12-10-11) : (13-15-14)	1CT : 1CT
DCL	350μH MIN. @ 100kHz, 100mV WITH 8mA DC BIAS
INSERTION LOSS	1.1dB MAX. @ 0.1 TO 1MHz 0.5dB MAX. @ 1 TO 65MHz 1.0dB MAX. @ 80MHz 1.2dB MAX. @ 125MHz
RETURN LOSS UNDER 100 OHMS±15% ENVIRONMENT	18dB MIN. @ 0.5 TO 40 MHz 12-20LOG (f/80MHz) MIN. @ 40 TO 100 MHz
COMMON TO COMMON REJECTION	30dB MIN. @ 0.1 TO 100 MHz
CROSSTALK	33-20LOG (f/100MHz) dB MIN. @ 1 TO 100MHz
HIPOT	LEAKAGE CURRENT LESS THAN 1mA AT 1500VAC

REV. : A | PAGE : 2

ORIGINATED BY	DATE	TITLE	PART NO. / DRAWING NO.	STANDARD DIM.	[ ] METRIC DIM. AS REF.
Alice Pang	2021-01-27	ELECTRICAL SPECIFICATION S558-5999-M8-F	S558-5999-M8-F	TOL. IN INCH	UNIT : INCH [mm]
DRAWN BY	DATE		FILE NAME	.X / .XX / .XXX	SCALE : N/A
ZC Guo	2021-01-27		S5585999M8FA.DWG		SIZE : A4

bel POWER | PROTECT | CONNECT

This document is electronically generated. This is a controlled copy if used internally
Please read our datasheet & drawing disclaimer here.

THE INFORMATION CONTAINED HEREIN IS CONSIDERED "PROPRIETARY" TO BEL FUSE INC. AND SHALL NOT BE COPIED, REPRODUCED OR DISCLOSED WITHOUT THE WRITTEN APPROVAL OF BEL FUSE INC.

RoHS

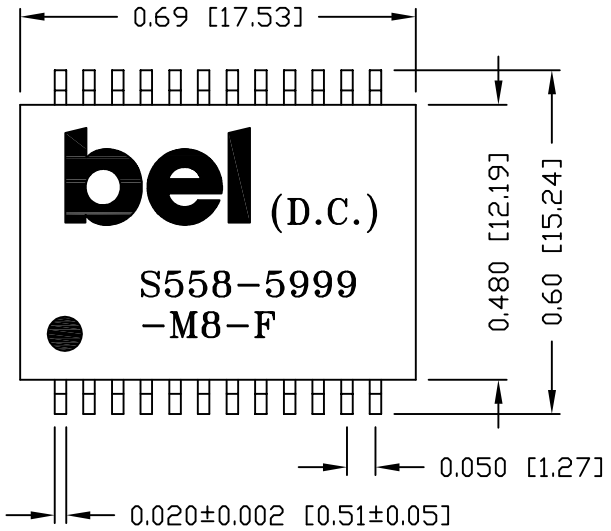

SUGGESTED PCB PAD LAYOUT

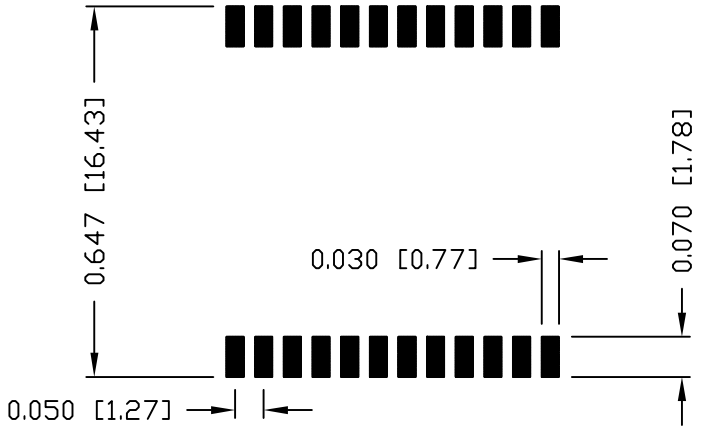

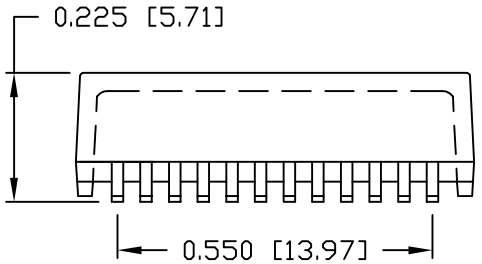

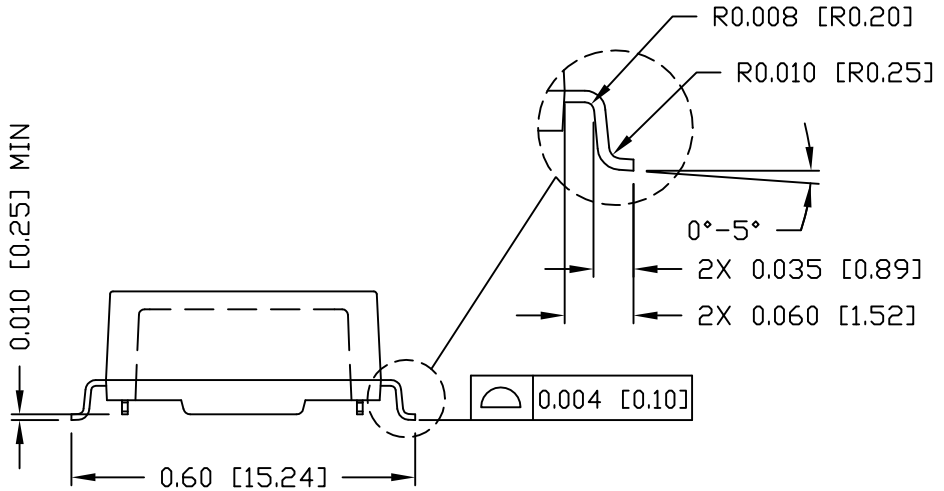

NOTES:

1. STANDARD MARKING REFER TO DOC. HAND-WORK-04.
2. PACKAGE CODE: "RQS001".

REV. : A | PAGE : 3

ORIGINATED BY	DATE	TITLE	PART NO. / DRAWING NO.	STANDARD DIM.	[ ] METRIC DIM. AS REF.
Lawrence Tsang	2021-01-27	MECHANICAL DRAWING S558-5999-M8-F	S558-5999-M8-F	TOL. IN INCH	UNIT : INCH [mm]
DRAWN BY	DATE		FILE NAME	.X / .XX ±0.01 / .XXX ±0.005	SCALE : N/A
ZC Guo	2021-01-27		S5585999M8FA.DWG		SIZE : A4

POWER | PROTECT | CONNECT

This document is electronically generated. This is a controlled copy if used internally