THE INFORMATION CONTAINED HEREIN IS CONSIDERED "PROPRIETARY" TO BEL FUSE INC. AND SHALL NOT BE COPIED, REPRODUCED OR DISCLOSED WITHOUT THE WRITTEN APPROVAL OF BEL FUSE INC.

SCHEMATIC

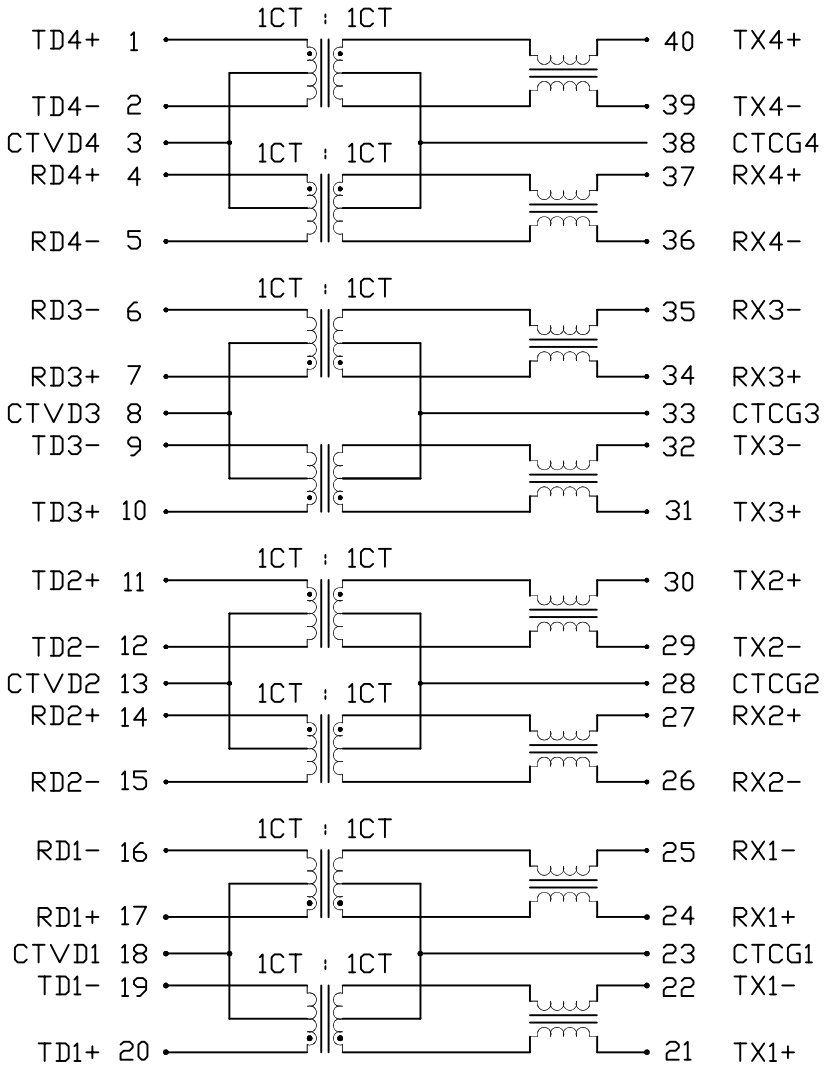

ELECTRICAL CHARACTERISTICS @ 25°C

RoHS

TURNS RATIO		
Tx SIDE:		1CT : 1CT
Rx SIDE:		1CT : 1CT
POLARITY :		Rx 4°&37°, 7°&34°, 14°&27°, 17°&24° Tx 1°&40°, 10°&31°, 11°&30°, 20°&21° IN PHASE
DCL		350μH MIN. @ 100kHz, 100mV WITH 8mA D.C. BIAS.
INSERTION LOSS		@ 100kHz - 80MHz 1.0 dB MAX
RETURN LOSS		
MEASURED UNDER A	@ 0.1MHz - 30MHz	18 dB MIN.
100 Ω ENVIRONMENT	@ 30MHz - 60MHz	18-20 LOG(f/30MHz)
	@ 60MHz - 80MHz	12 dB MIN.
COMMON TO DIFFERENTIAL MODE REJECTION	@ 0.1MHz TO 100MHz	40 dB MIN.
COMMON TO COMMON MODE REJECTION	@ 0.1MHz TO 100MHz	35 dB MIN.
	@ 100MHz TO 500MHz	20 dB MIN.
CROSSTALK	@ 0.1MHz TO 100MHz	32 dB MIN.
HIPOT		LEAKAGE CURRENT LESS THAN 1mA AT 1500VAC

NOTES :

THIS PRODUCT HAS BEEN SUPPLYING TO JAPAN CUSTOMERS. PCN PROCESS NEEDS TO COMPLY WITH 4M CRITERIA.

REV. : A | PAGE : 2

ORIGINATED BY: Alice Pang	DATE: 2021-01-27	TITLE: ELECTRICAL SPECIFICATION S558-5999-Q9-F	PART NO. / DRAWING NO.: S558-5999-Q9-F	STANDARD DIM. TOL. IN INCH: .X, .XX, .XXX	[ ] METRIC DIM. AS REF.
DRAWN BY: ZC Guo	DATE: 2021-01-27		FILE NAME: S558599Q9FA.DWG		UNIT : INCH [mm]
					SCALE : N/A
					SIZE : A4

bel POWER | PROTECT | CONNECT

This document is electronically generated. This is a controlled copy if used internally
Please read our datasheet & drawing disclaimer here.

THE INFORMATION CONTAINED HEREIN IS CONSIDERED "PROPRIETARY" TO BEL FUSE INC. AND SHALL NOT BE COPIED, REPRODUCED OR DISCLOSED WITHOUT THE WRITTEN APPROVAL OF BEL FUSE INC.

RoHS

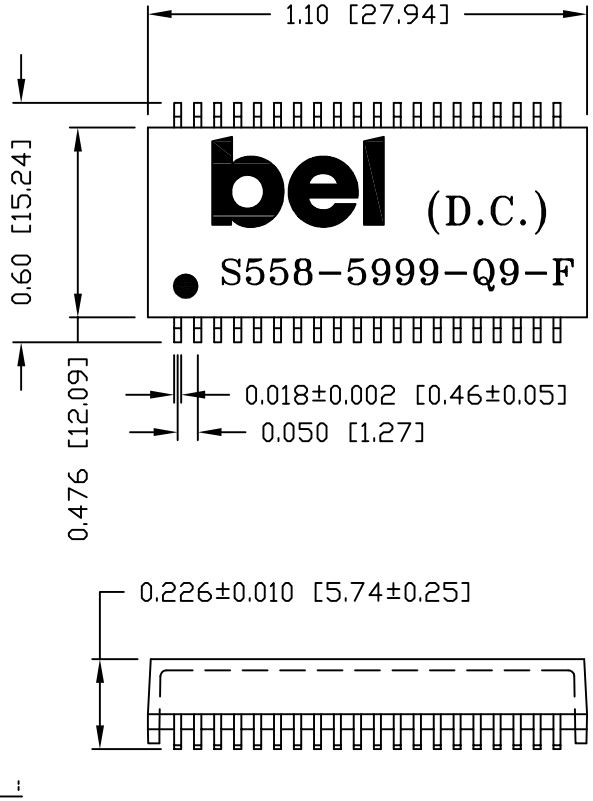

SUGGESTED PCB PAD LAYOUT

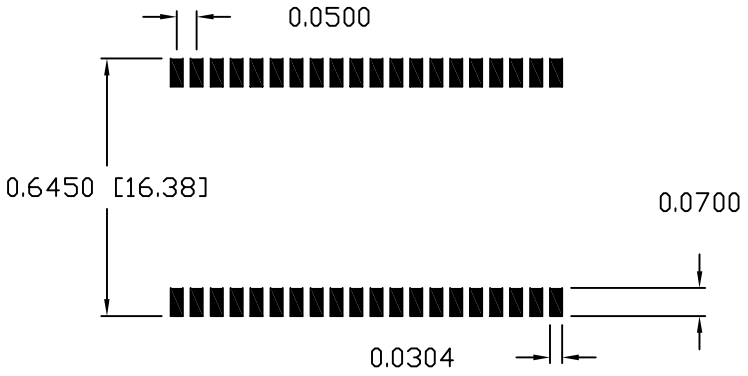

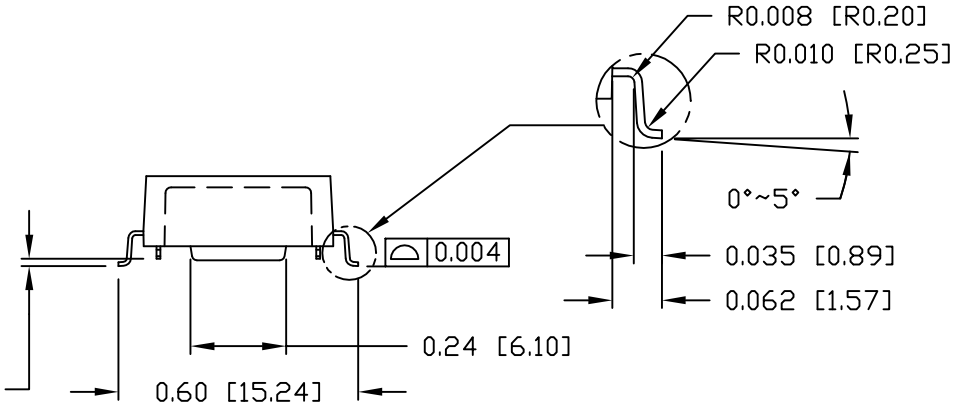

NOTES :

1. STANDARD MARKING REFER TO DOC. HAND-WORK-04.
2. PACKAGE CODE: "RRS001".
3. THIS PRODUCT HAS BEEN SUPPLYING TO JAPAN CUSTOMERS. PCN PROCESS NEEDS TO COMPLY WITH 4M CRITERIA.

REV. : A	PAGE : 3				
ORIGINATED BY / DATE: Lawrence Tsang 2021-01-27	TITLE: MECHANICAL DRAWING S558-5999-Q9-F	PART NO. / DRAWING NO.: S558-5999-Q9-F	STANDARD DIM. TOL. IN INCH: .X / .XX ±0.01 / .XXX ±0.005	[ ] METRIC DIM. AS REF.	
DRAWN BY / DATE: ZC Guo 2021-01-27		FILE NAME: S558599Q9FA.DWG		UNIT : INCH [mm]	
				SCALE : N/A	SIZE : A4

POWER | PROTECT | CONNECT

This document is electronically generated. This is a controlled copy if used internally