FACE VIEW-FEMALE INSERT		
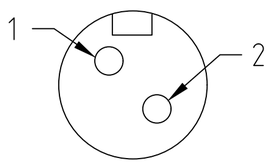	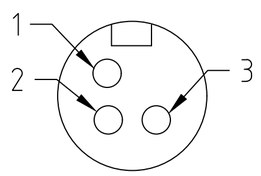	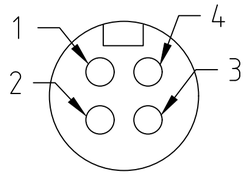
1 BLACK 2 WHITE	1 BLACK 2 WHITE 3 GREEN	1 BLACK 2 GREEN 3 RED 4 WHITE

MATERIAL NO.	ENGINEERING NO.	POLES	FINISHED LENGTH
1300030077	6R2004A29A120	2	12IN [305mm]
1300030088	6R3004A29A120	3	12IN [305mm]
1300030089	6R3004A29F030	3	3.0FT [0.9M]
1300030055	32682	4	12IN [305mm]
1300030124	6R4004A29A120	4	12IN [305mm]
1300030128	6R4004A29F060	4	6.0 FT. [1.8M]

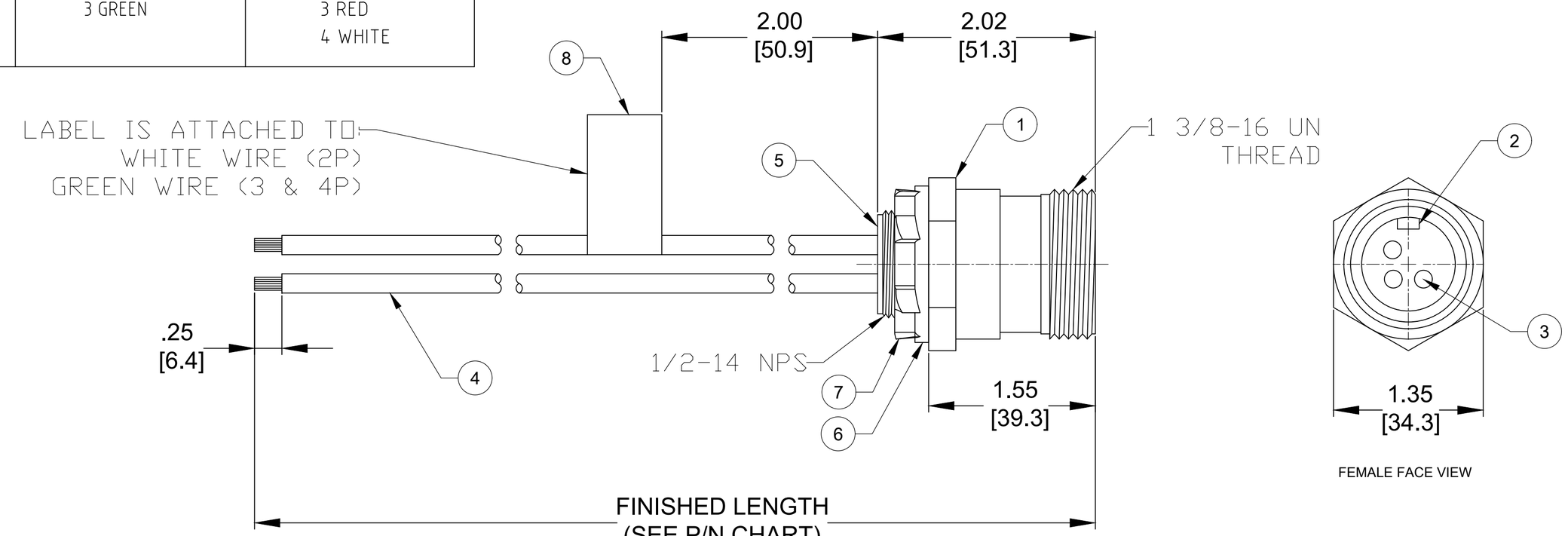

FEMALE FACE VIEW

NOTES:
1. MATERIAL: AS NOTED
2. FINISH: AS NOTED
3. ELECTRICAL:
   VOLTAGE: 600V AC/DC
   CURRENT: 2 & 3 POLE: 25A
   4 POLE: 20A
4. TEMP RATING: -20°C TO +105°C
5. PROTECTION: IP67 (WHEN MATED)
6. COUPLING THREAD: AS NOTED
7. UL CERTIFIED FILE: E46237
   CSA CERTIFIED FILE: LR6837
8. ALL DIMS ARE FOR REFERENCE UNLESS TOLERANCED OR NOTED OTHERWISE

PART NUMBER LEGEND

6R2004A29A120

POLES
2-4

FINISHED LENGTH:
A120= 12 INCHES
F020= 2 FOOT
F100= 10 FEET
M005= 0.5 METER
M010= 1 METER
M100= 10 METER

CABLE LENGTH TOLERANCES
>.3M [1FT]: +19mm-0 [+.75in-0]
.3 - .9M [1 - 3FT]: +44.5mm-0 [+1.75in-0]
.9 - 1.8M [3 - 6FT]: +55.6mm-0 [+2.19in-0]
1.8 - 3.7M [6 - 12FT: +88.9mm-0 [+3.50in-0]
3.7 - 7.3M [12 - 24FT]: +165.1mm-0 [+6.50in-0]
7.3-14.6M [24 - 48FT]: +317.5mm-0 [+12.50in-0]
14.6 - 30.5M [48-100FT]: +622.3mm-0 [+24.50in-0]
OVER 30M [100FT] +2% OF FINISHED LENGTH

ITEM	DESCRIPTION	MATERIAL	FINISH
8	WRAP LABEL	VINYL	BLACK/YELLOW
7	LOCK NUT	STEEL	ZINC PLATED
6	GASKET SEAL	NEOPRENE	BLACK
5	POTTING MATERIAL	EPOXY	
4	WIRE, 12 AWG, UL 1015	PVC INSULATION	SEE FACE VIEWS
3	CONTACT SOCKET	COPPER ALLOY	GOLD PLATED
2	FEMALE INSERT	RUBBER	YELLOW
1	RECPTACLE SHELL	NYLON	BLACK

DOCUMENT STATUS	P1	RELEASE DATE	2019/10/25 19:21:01

THIS DRAWING CONTAINS INFORMATION THAT IS PROPRIETARY TO MOLEX ELECTRONIC TECHNOLOGIES, LLC AND SHOULD NOT BE USED WITHOUT WRITTEN PERMISSION

SYMBOLS: EA = 0, EC = 0, EP = 0, S = 0, ▼ = 0, C = 0, ☒ = 0, ■ = 0, V = 0

DIMENSION UNITS: INCH/MM | SCALE: 1:1

GENERAL TOLERANCES (UNLESS SPECIFIED)

	mm	INCH
4 PLACES	±----	±----
3 PLACES	±----	±----
2 PLACES	±----	±----
1 PLACE	±----	±----
0 PLACES	±----	±----
ANGULAR TOL ±	---- °	

DRAFT WHERE APPLICABLE MUST REMAIN WITHIN DIMENSIONS

CURRENT REV DESC: RELEASED

EC NO: 625795

DRWN:	RSTONE	2019/09/30
CHK'D:	MZIELINSKI	2019/10/16
APPR:	BWOODMAN	2019/10/25

INITIAL REVISION:

DRWN:	RSTONE	2019/09/30
APPR:	BWOODMAN	2019/10/25

THIRD ANGLE PROJECTION | DRAWING: C-SIZE | SERIES: 130003

molex

QUICK CHANGE RECEPTACLE ASSY.
2 - 4 POLE, FEMALE,12AWG, 1/2 IN NPS

PRODUCT CUSTOMER DRAWING

DOCUMENT NUMBER	DOC TYPE	DOC PART	REVISION
1300030077	PSD	000	A

MATERIAL NUMBER	CUSTOMER	SHEET NUMBER
SEE MAT. NO. CHART	----	1 OF 1

FORMAT: ACAD-tb-prod-C
REVISION: A1
DATE: 2019/05/12