Part Number : 1300030051
Product Description : Quick-Change Receptacle, 4 Pole, 1/2" - 14 NPT, Male (Straight) to 12 AWG Leads, 0.30m (11.81") Length
Series Number : 130003
Status : Active
Product Category : Industrial Connectors
Engineering Part Number : 32680

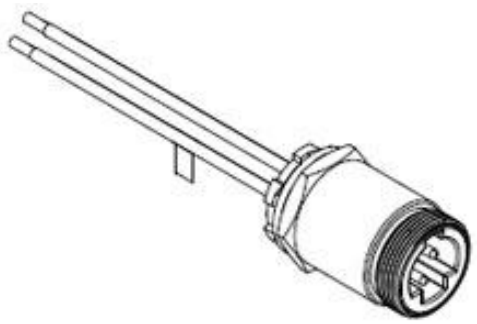

Documents and Resources

Drawings

1300030051_sd.pdf

Product Environment Compliance

Compliance

GADSL/IMDS	Not Relevant
China RoHS	per SJ/T 11365-2006
EU ELV	Not Relevant
Low-Halogen Status	Not Reviewed per IEC 61249-2-21
REACH SVHC	Not Reviewed per D(2025)7771-DC (04 Feb 2026)
EU RoHS	Compliant with Exemption 6(c) per EU 2015/863

Compliance Statements

- EU RoHS
- REACH SVHC
- Low-Halogen

Industry Documents

- IPC 1752A Class C
- IPC 1752A Class D
- Molex Product Compliance Declaration
- IEC-62474
- chemSHERPA (xml)

Substances of Interest

- PFAS

EU RoHS Certificate of Compliance

Additional Product Compliance Information

CE - Declaration of Conformity

UKCA - Declaration of Conformity

Part Details

General

Status	Active
Category	Industrial Connectors
Series	130003
Description	Quick-Change Receptacle, 4 Pole, 1/2" - 14 NPT, Male (Straight) to 12 AWG Leads, 0.30m (11.81") Length
IP Rating	IP67
Product Name	Quick-Change
Type	Single Ended (pigtail)
UPC	78678832680

Agency

CSA	LR6837
UL	E46237

Electrical

Current - Maximum per Contact	20.0A
Voltage - Maximum	600V AC/DC

Physical

Coupling Type	External Thread
Gender	Male
Keyway	Single
Length	0.305m
Material - Component	Nylon
Mounting Thread Size	1/2" - 14 NPT

Net Weight	421.000/g
Orientation	Straight
Panel Mount	Front
Poles	4
Temperature Range - Operating	-20° to +105°C
Wire/Cable Type	UL 1015
Wire Size (AWG)	12