This document was generated on 03/08/2016

PLEASE CHECK WWW.MOLEX.COM FOR LATEST PART INFORMATION

Part Number: 0549280670
Status: Active
Description: 7.50mm Pitch MTC™ Spring Type Receptacle, 6 Circuits Version, White Color

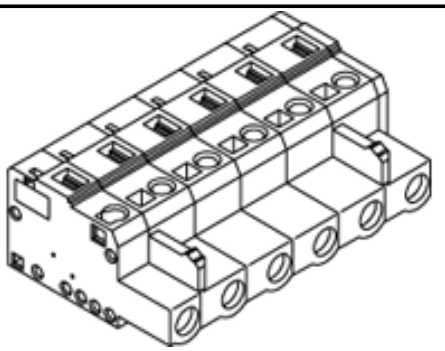

Series image - Reference only

Documents:

3D Model
Drawing (PDF)
Product Specification PS-51241-005 (PDF)
RoHS Certificate of Compliance (PDF)

Agency Certification	
CSA	LR19980
UL	E29179
General	
Product Family	Terminal Blocks
Series	54928
Application	N/A
Component Type	Plug
Product Name	MTC™
Type	Euro Block
UPC	822348355709
Physical	
Circuits (Loaded)	6
Circuits (maximum)	6
Color - Resin	White
Entry Angle	Vertical
Flammability	94V-0
Lock to Mating Part	Yes
Material - Resin	Polyester
Net Weight	14552.500/mg
Number of Rows	1
Orientation	Vertical
Panel Mount	No
Pitch - Mating Interface	7.50mm
Pitch - Termination Interface	7.50mm
Polarized to Mating Part	Yes
Shrouded	Fully
Stackable	No
Temperature Range - Operating	-30°C to +85°C
Wire Size AWG	14, 16, 18, 20, 22, 24, 26
Electrical	
Current - Maximum per Contact	16.0A
Voltage - Maximum	400V
Material Info	
Reference - Drawing Numbers	
Product Specification	PS-51241-005
Sales Drawing	SD-54928-004

EU ELV
Not Relevant

EU RoHS
Compliant

China RoHS

REACH SVHC
Not Contained Per -ED/79/2015 (17 December 2015)

Halogen-Free Status
Not Low-Halogen

Need more information on product environmental compliance?

Email productcompliance@molex.com
Please visit the Contact Us section for any non-product compliance questions.

China ROHS	Green Image
ELV	Not Relevant

Search Parts in this Series
54928 Series

Mates With
55759

This document was generated on 03/08/2016

PLEASE CHECK WWW.MOLEX.COM FOR LATEST PART INFORMATION